2021

(ENG-V.01)

Hydraulic products index:

- **HFP Series Hydraulic Pumps (Introduction)**……. # 1
  - HFP200 - single stage - single effect - pedal …….. # 2-3
  - HFP2STSE - double stage - single effect - pedal / manual ……..…….. # 4-5
  - HFP2STDE - double stage - double effect - pedal / manual …….…… # 6-7
  - HFP2STUS - double stage - single effect - ultra portable - manual …….…… # 8-9
- **HP-UP Series air-hydraulic pumps (Introduction)**…….. # 10-11
- **Air-hydraulic pumps (HP Series)…….**……. # 12-14
  - HP - single effect - pedal …… # 15-16
  - HP-AP – single effect – linear……..…..…… # 17.18
  - HP-RC - single effect – pneumatic.……..…….. # 19-20
  - HP-REMOTE - single effect - remote control (2 and 3 buttons)……..…….. # 21-22
  - HP-LEVER - single effect - manual …… # 23-24
- **Air-hydraulic pumps (UP Series)** ……..……. # 25-29
  - UPF – single effect – pedal …….……. # 30-31
  - UPC - double effect - Cetop03……. # 32-33
  - UPL - single effect - linear ……. # 34-35
  - UPHC - single effect - simultaneous actuators application…… # 36-37
  - UMP - single and double effect – hand valve - heavy use (mining pump)…….. # 38
- **Air-hydraulic pumps (UPM Series)**
  - UPM - double effect – hand valve……. …… # 39-40
  - UPM-2V - double effect - double hand valve…… …….. # 41-42
  - UPMD710 - double effect - double air-pneumatic motor - hand valve……. # 43-44
  - UPMD725-RC - double effect - double air-pneumatic motor - hand valve + RC …….. # 45-46
- **Air-hydraulic pumps (UPR Series)**
  - UPR - single effect - remote control (2 and 3 buttons)……..…….. # 47-48
  - UPRD - double effect - remote control (2 and 3buttons)…….…… # 49-50
  - UPRDSE - single effect - double pneumatic motor - 2p and 3p remote control ……... # 51-52
- **Air-hydraulic pumps (UPD Series)**
  - UPFD - single effect - double air-pneumatic motor - pedal ……..…….. # 53-54
  - UPMD - double effect – double air-pneumatic motor - hand valve …… # 43-44
  - UPRDSE - single effect - double air-pneumatic motor - 2p and 3p remote control…… # 51-52
- **BDP Series Battery-Powered Electro-Hydraulic Pumps (Introduction)**……. # 55
  - BDP - Battery Driven Pump - single effect - portable - lithium battery …….. # 56-57
- **Portable electro-hydraulic pumps (EDPH Series)…**……...
  - EDPH - Electric Driven Pump High Flow - double effect - HAWE valves ……... # 58-59

- **H2O Series Water-Hydraulic Pumps (Introduction)**……. # 60
  - o UPF252-H2O - single effect - pedal – water use……. ……. # 61-62
  - o UPM252-H2O – double effect – hand valve – water use ……. # 63-64
  - o UPW250-H2O - hydro-pneumatic motor for thermo-hydraulic applications…… # 65-66
- **Pump accessories (Introduction)** …… # 67
  - o HP Series
    - ▪ 1.4L colored tanks …… # 68
    - ▪ Oversized tanks in steel - SL and XL …….……. # 69
    - ▪ Pedal protection kit …..…… # 70
    - ▪ Auxiliary pneumatic pedal kit …… # 71
  - o UP Series
    - ▪ 2.4 L colored tanks …….. # 73
    - ▪ Oversized steel tanks 5 - 10 - 12 - 20 L …….. # 72
    - ▪ Colored lids …..…….. # 74
    - ▪ Fixing plate kit …… # 75
    - ▪ Remote controls (different types) …….. # 76
    - ▪ Parking feet kit ……..…… # 80
    - ▪ Pivoting wheels kit …… # 81
    - ▪ Auxiliary pneumatic pedal kit …… # 71
  - o UPF Pump
    - ▪ Quick release kit …….. # 77
    - ▪ Pedal protection kit …… # 78
    - ▪ Pressure gauge kit ……. # 79
  - o UPHC Pump
    - ▪ Level switch kit …… # 82
    - ▪ Pressure switch kit …….. # 83
    - ▪ Mechanical module ……..... # 84
    - ▪ Pneumatic module …… # 85
  - o BDP Pump
    - ▪ Lithium battery …….. # 86
    - ▪ Battery charger …….. # 87
- **System Parts (Introduction)……**…… # 88
  - o Flexible hoses …….. # 89
  - o Pressure gauges..…… # 90
  - o Valves ……. # 91-98
  - o Quick couplings and fittings……... # 99
  - o Hydraulic oil ……. # 100-102

- **Hydraulic filters (Introduction)** ……. # 103-104
  - o 350 Series…… # 105-118
  - o 500 Series…… # 119-132
  - o 700 Series…… # 133-139
- **Hydraulic cylinders (Introduction)** ……. # 140
  - o 10DE cylinders……. # 141-142
  - o DE cylinders – double effect…… # 143
  - o DEK-ForkLift cylinders…….. # 144-145
  - o T-plunging cylinders …….. # 146-147
- **Industrial vehicles - Cab tilting systems (Introduction)** ……..…….. # 148
  - o Lifting cylinders ……..… # 149
  - o E-Cab - integrated tilting system (electric pump + double acting cylinder) ……. # 150-151
  - o Tilting pumps - manual and electric …….….. # 152-154
- **Use and maintenance manuals (index)**……. # 155

All BELL products are designed and manufactured within BELL SRL in via F. De Pisis, 5 - 42124 Reggio Emilia (RE) - Italy, according to the Quality Standards that distinguish the MADE IN ITALY from the Rest of the World.

Hydraulic Pumps (HFP Series)

(Introduction)

BELL'S HAND HYDRAULIC PUMPS ARE LIGHTWEIGHT, COMPACT AND STURDY FOR MAXIMUM DURABILITY!

- **All main components are treated for maximum resistance to corrosion and atmospheric agents**
- **Different tank capacities**
- **Manual operation (ergonomic handle) or pedal (anti-slip knurling) for maximum versatility in the field of use.**
- **Single or double speed operation for a significant reduction in the effort on the lever and the number of strokes required to reach the desired pressure.**
- **All BELL manual hydraulic pumps are equipped with a safety valve, incorporated or external, to protect against any overloads**

Additional benefits:

- The HFP2ST BELL pumps of the HFP series are dual-stage manual hydraulic pumps for rapid approach and high pressure over 700bar of operation with a limited effort on the operating lever
- Compatibility of both single and double acting cylinders
- Made entirely of high-strength steel and aluminum, with double piston element to reduce effort and increase the speed of execution

All BELL products are designed and manufactured within BELL SRL in via F. De Pisis, 5 - 42124 Reggio Emilia (RE) - Italy, according to the Quality Standards that distinguish the MADE IN ITALY from the Rest of the World.

HFP series

HFP200

Hydraulic pump, pedal operated, single speed, 11.5 cm3 oil flow per stroke

---

Series: HFP

Product line: Industrial tools, lifting systems, garages, hobby, emergency, locking systems, hydraulic equipment

- **Operated through pedal**
- **Steel construction for maximum strength and durability**
- **Compatibility with single-acting cylinders with small quantity of oil and low output pressures**
- **Compact and sturdy construction for heavy duty and durability**
- **Low lever effort for easy use**
- **It does not require a pneumatic network, compressors or any other devices for operation**
- **Easy to handle and transport**
- **Versatile use in both horizontal & vertical positions**
- **Adjustable safety valve to protect against any possible overloads**
- **Slots on the base support for an easy installation on the application**
- **Lightweight**

Technical features:

Max working pressure (bar):	200
Max working pressure 2nd stage (bar):	/
Cylinder compatibility:	single effect
Tank capacity (L):	1,3
Usable oil (L):	1,3
Oil flow per stroke (cm3):	11,5
Standard oil port thread:	G3/8
Max effort on the lever (kg):	69
Piston stroke (mm):	44
Valve function:	manual
Energy source:	manual
Size:	mm 748 x 150 x 431
Weight (kg):	9,5

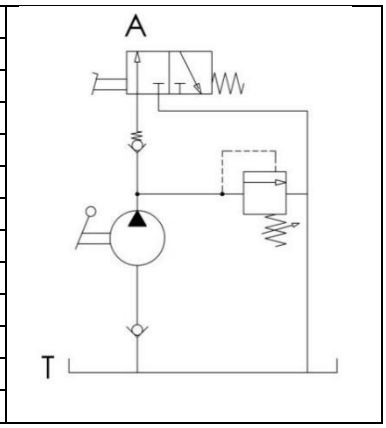

Series comparison:

Type	Speed	Cylinder	Working Pressure (I° Stage)	Working Pressure (II° Stage)	Tank (L)	Usable Oil (L)	Oil flow (l/min) (I° Stage)	Oil flow (l/min) (II° Stage)	Weight (Kg)
HFP200	Single	SE	200	/	1,3	1,3	11,5	/	9,5
HFP2STSE	Double	SE	50	700/850/1000	1	1	12	2	8,5
HFP2STDE	Double	DE	50	700/850/1000	1	1	12	2	8,2
HFP2STUS	Double	SE	50	700	0,5	0,46	4,6	0,92	3,9

Size:

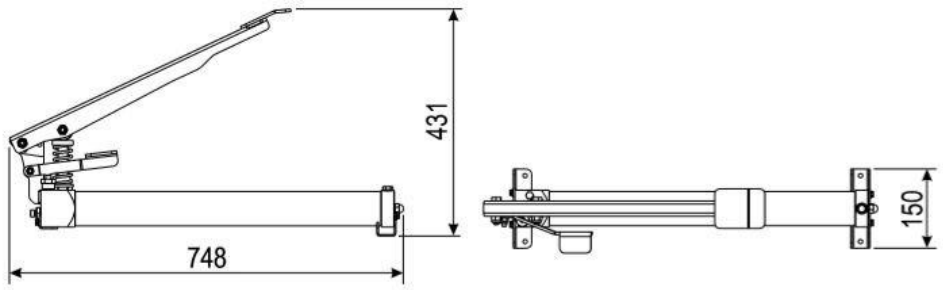

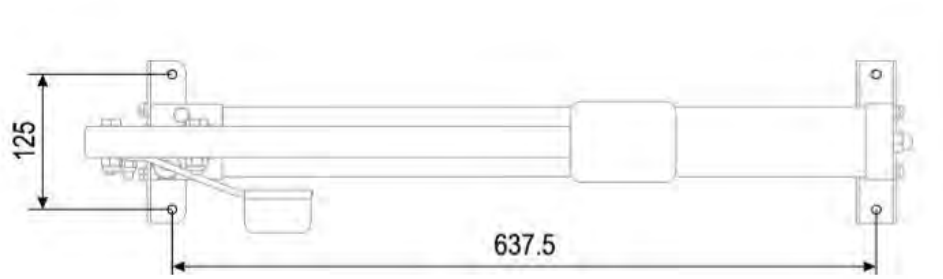

To order:

- P/N 927000012HFP200 200BAR G3/8 BELL
- P/N 927000060 HFP200 200BAR NEUTRAL

Spare parts:

- P/N 800050230 SEAL KIT HFP200

Accessories:

- Hose Flex
- Pressure gauge
- Support feet

HFP series

HFP2STSE

Hydraulic pump, double speed, lever/pedal operated, for industrial and professional tools, single acting cylinders, 1L usable oil

---

Series: HFP

Product line: Industrial tools, lifting systems, garages, hobby, emergency, clamping systems, hydraulic equipment, crimper

- **Lever or pedal operated**
- **Double stage for a very low effort on the lever and an increased efficiency**
- **Significant reduction of fatigue during operations**
- **Steel construction for maximum strength and durability**
- **Lightweight and compact**
- **Single acting cylinder compatibility**
- **Compact and sturdy construction for heavy duty**
- **It does not require any pneumatic network, compressors or any other devices for operation**
- **Easy to handle and transport**
- **Versatile use in both horizontal & vertical positions**
- **Working pressures up to 1.000bar**
- **Externally adjustable safety valves to protect against overloads**
- **Slide with slots for perfect stability and easy installation onto the application**
- **Light weight and overall dimensions.**

Technical features:

Max working pressure 1st stage (bar):	50
Max working pressure 2nd stage (bar):	700/850/1.000
Valve exchange displacement (cc):	2,7
Cylinder compatibility::	single effect
Tank capacity (L):	1
Usabel oil (L)::	1
Oil flow per stroke 1st stage (cm3):	12
Oil flow per stroke 2nd stage (cm3):	2
Standard oil port thread:	G1/4
Max effort on the lever (kg):	43
Piston stroke (mm):	24
Valve function:	manual
Energy source:	manual
Size:	mm 580 x 189 x 195
Weight (kg):	8,5

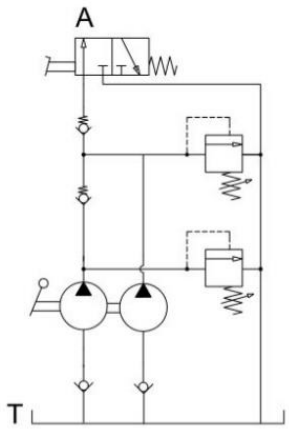

Size:

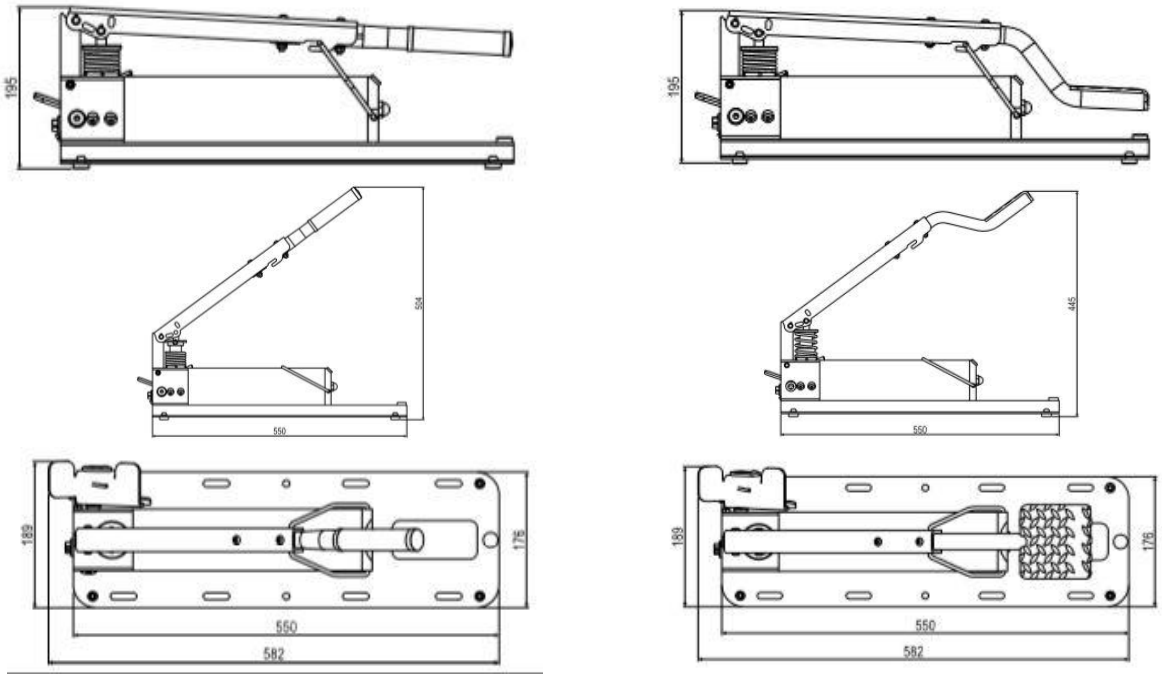

Series comparison:

Type	Speed	Cylinder	Working Pressure (I° Stage)	Working Pressure (II° Stage)	Tank (L)	Usable Oil (L)	Oil flow (l/min) (I° Stage)	Oil flow (l/min) (II° Stage)	Weight (Kg)
HFP200	Single	SE	200	/	1,3	1,3	11,5	/	9,5
HFP2STSE	Double	SE	50	700/850/1000	1	1	12	2	8,5
HFP2STDE	Double	DE	50	700/850/1000	1	1	12	2	8,2
HFP2STUS	Double	SE	50	700	0,5	0,46	4,6	0,92	3,9

To order:

- P/N 927020040 HFP2ST700SE 700BAR 1L HANDLE BELL
- P/N 927020020 HFP2ST700SE 700BAR 1L PEDAL BELL
- P/N 927020060 HFP2ST700SE 850BAR 1L + GAUGE BELL

Spare parts:

- SEAL KIT HFP2ST

Accessories:

- Hose Flex
- Pressure gauge
- Support feet

HFP series

HFP2STDE

Hydraulic pump, double speed, lever/pedal operated, for industrial and professional tools, double acting cylinders, 1L usable oil

---

Series: HFP

Product line: Industrial tools, lifting systems, garages, hobby, emergency, clamping systems, hydraulic equipment, crimper.

- **Lever or pedal operated**
- **Double stage for a very low effort on the lever and an increased efficiency**
- **Significant reduction of fatigue during operations**
- **Steel construction for maximum strength and durability**
- **Lightweight and compact**
- **Double effect cylinder compatibility**
- **4/3 way hand valve included**
- **Compact and sturdy construction for heavy duty**
- **It does not require any pneumatic network, compressors or any other devices for operation**
- **Easy to handle and transport**
- **Versatile use in both horizontal & vertical positions**
- **Working pressures up to 1.000bar**
- **Externally adjustable safety valves to protect against overloads**
- **Slide with slots for perfect stability and easy installation onto the application**
- **Light weight and overall dimensions.**

Specifiche tecniche:

Max working pressure 1st stage (bar):	100
Max working pressure 2nd stage (bar):	700/850/1.000
Valve exchange displacement (cc):	2,7
Cylinder compatibility::	double effect
Tank capacity (L):	1
Usabel oil (L)::	1
Oil flow per stroke 1st stage (cm3):	12
Oil flow per stroke 2nd stage (cm3):	2
Standard oil port thread:	43
Max effort on the lever (kg):	G1/4
Piston stroke (mm):	24
Valve function:	manual
Energy source:	manual
Size:	mm 550 x 197 x 195
Weight (kg):	8,2

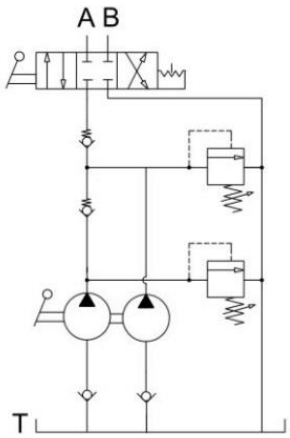

Size:

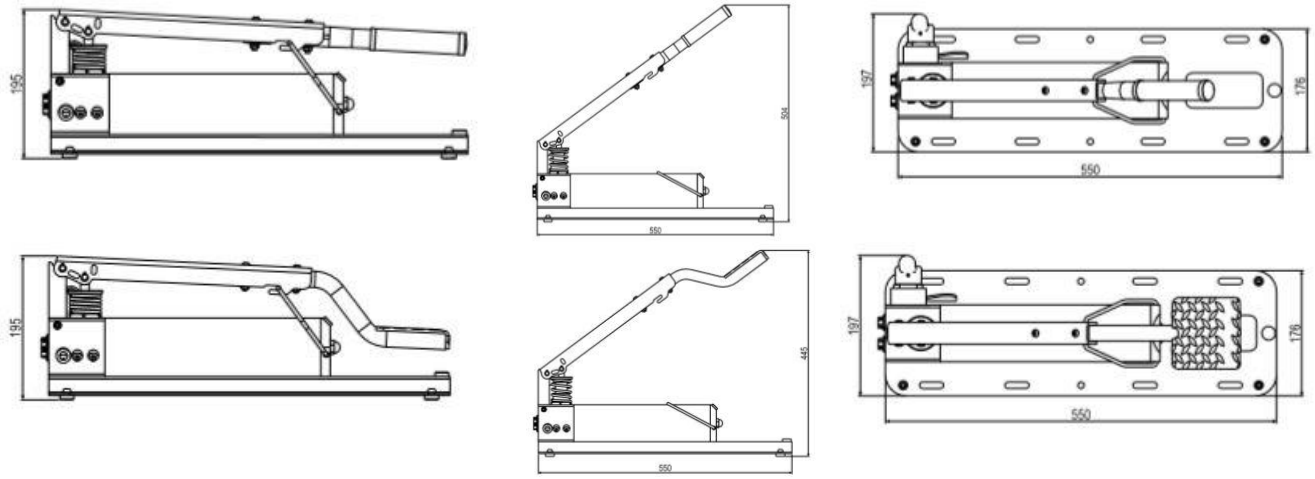

Series comparison:

Type	Speed	Cylinder	Working Pressure (I° Stage)	Working Pressure (II° Stage)	Tank (L)	Usable Oil (L)	Oil flow (l/min) (I° Stage)	Oil flow (l/min) (II° Stage)	Weight (Kg)
HFP200	Single	SE	200	/	1,3	1,3	11,5	/	9,5
HFP2STSE	Double	SE	50	700/850/1000	1	1	12	2	8,5
HFP2STDE	Double	DE	50	700/850/1000	1	1	12	2	8,2
HFP2STUS	Double	SE	50	700	0,5	0,46	4,6	0,92	3,9

To order:

- P/N 927020050HFP2ST700DE 700BAR 1L HANDLE BELL
- P/N 927020030 HFP2ST700DE 700BAR 1L PEDAL BELL

Spare parts:

- SEAL KIT HFP2ST

Accessories:

- Hose Flex
- Pressure gauge
- Support feet

HFP series

HFP2STUS-ULTRA SLIM

Ultra slim hydraulic pump, double speed, lever/ pedal operated, for industrial and professional tools, single acting cylinders, 0.5L usable oil

NEW NEW NEW NEW

Series: HFP

Product line: Industrial tools, lifting systems, garages, hobby, emergency, clamping systems, small hydraulic equipment, crimper, hydraulic cutters, ultra portable applications

- **Operated through lever**
- **Ultra compact size and lightweight for maximum portability**
- **Double stage for a very low effort on the lever and an increased efficiency**
- **Significant reduction of fatigue during operations**
- **Steel construction for maximum strength and durability**
- **Single acting cylinder compatibility**
- **Compact and sturdy construction for heavy duty**
- **It does not require any pneumatic network, compressors or any other devices for operation**
- **Easy to handle and transport**
- **Versatile use in both vertical and horizontal positions**
- **Max working pressure up to 700bar**
- **Very lightweight and overall dimensions.**
- **Also available in a case kit complete with flex hose and fittings**

Technical features:

Max working pressure 1st stage (bar):	50
Max working pressure 2nd stage (bar):	700
Cylinder compatibility::	single effect
Tank capacity (L):	0,5
Usabel oil (L)::	0,46
Oil flow per stroke 1st stage (cm3):	4,6
Oil flow per stroke 2nd stage (cm3):	0,92
Standard oil port thread:	30
Max effort on the lever (kg):	3/8NPTF
Piston stroke (mm):	18,5
Valve function:	manual
Energy source:	manual
Size:	mm 356 x 125 x 336
Weight (kg):	3,9

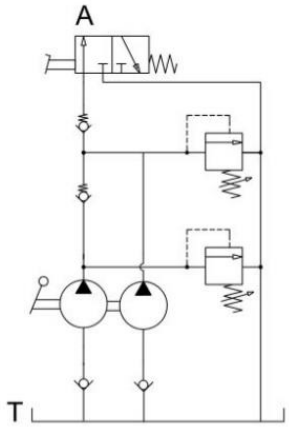

Size:

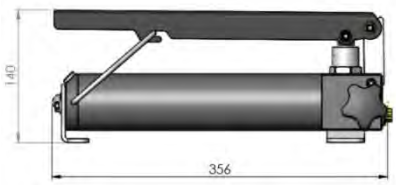

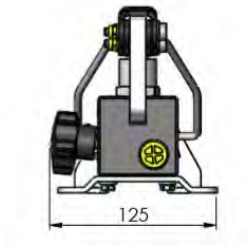

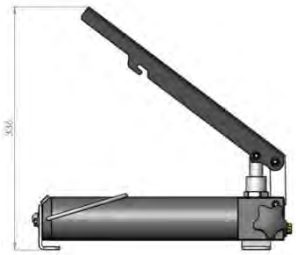

Series comparison:

Type	Speed	Cylinder	Working Pressure (I° Stage)	Working Pressure (II° Stage)	Tank (L)	Usable Oil (L)	Oil flow (l/min) (I° Stage)	Oil flow (l/min) (II° Stage)	Weight (Kg)
HFP200	Single	SE	200	/	1,3	1,3	11,5	/	9,5
HFP2STSE	Double	SE	50	700/850/1000	1	1	12	2	8,5
HFP2STDE	Double	DE	50	700/850/1000	1	1	12	2	8,2
HFP2STUS	Double	SE	50	700	0,5	0,46	4,6	0,92	3,9

To order:

- P/N 927020120HFP2ST700US-ULTRA SLIM 700BAR 0,5L BELL

Spare parts:

- SEAL KIT HFP2ST

Accessories:

- Hose Flex
- Pressure gauge
- Support feet
- KIT case (pump+hose flex+fittings)

Air-hydraulic pumps (Series HP - UP)

(introduction)

BELL AIR HYDRAULIC PUMPS ARE SMALL, HANDY AND ULTRA PORTABLE THANKS TO AN EXTREMELY COMPACT DESIGN.

THE ADVANTAGES OF HIGH PRESSURE HYDRAULIC ENERGY ENCLOSED IN A PORTABLE, COMPACT AND HANDY PRODUCT WITH PNEUMATIC OPERATION!

Operational principle:

- Take advantage of the compressed air of the normal pneumatic network (2.8 up to 10bar) through a pneumatically operated linear motor that generates a high hydraulic pressure (over 1000bar).
- Multiple possible configurations with oil tanks of different capacities - from 1.4 up to 20L depending on the versions and models.
- Oil pressures (bar) inversely proportional to the flow rate (l / min) and the inlet air pressure (bar). They vary according to the size of the internal diameter of the pump: from 0.85 to over 6 l / min of flow with air inlets from 2.8 up to 10bar (max) for operating pressures over 1000bar.
- Connection to the normal pneumatic network, which almost every company / workshop is equipped with, or to any source of compressed air.
- The pneumatic motor of the pump receives compressed air and generates the hydraulic force necessary to do the job.
- The hydraulic circuit remains pressurized via a check valve and does not drain until the release valve is opened.
- In the event of normal pressure drops, with the pneumatic network connected to the pump, the hydraulic pressure is restored automatically.
- In the event of normal pressure drops, with the pneumatic network connected to the pump, the hydraulic pressure is restored automatically.
- Replaceable internal air filter
- Externally adjustable safety valve to protect the hydraulic components against overloads, regardless of the inlet air pressure.

Oil Flow (l/min)

- The flow rate (l / min) increases or decreases in proportion to the increase or decrease in the hydraulic pressure.
- The hydraulic pressure of the pump depends mainly on the reduction ratio, the calibration pressure of the relief valve and the pneumatic inlet air pressure.
- The flow diagrams show the performance trend as a function of the operating pressure at the various inlet pneumatic pressures (ref. technical data sheets)

AIR-FLOW (l/min)

- Average air flow required 340 l / min.
- Minimum inlet air pressure of 2.8 bar up to a maximum recommended pressure of 10bar.
- An air lubricator is not required however, it is recommended to have a condensate filter.
- The diagrams show the relative air consumption based on pressures and flow rates (ref. technical data sheets)

Stall / Restart

- All BELL pumps can also operate at constant hydraulic pressure by adjusting the pneumatic inlet pressure (stall)
- To obtain this effect, it is necessary to adjust the pneumatic pressure so that the pump stops (stall) at the desired pressure value (the setting of the relief valve must exceed the operating pressure value so as not to start working).
- Whenever the hydraulic pressure decreases (circuit leaks), the pump restarts automatically and restores the set value (provided that the pneumatic network is always connected to the pump)
- The stall / restart diagrams show the pressure values at the relative conditions (ref. data sheets).
- It is recommended to check the settings by periodically restarting the pump
- A slight loss of air during operation in these conditions is completely normal

Transportability:

- Extremely portable, compact and lightweight and can be used wherever a source of compressed air is available.
- Extremely low weight, depending on the model chosen and the various configurations, from about 5 kg (HP model) up to about 35 kg (UP model with 20L tank).
  This is a significant advantage if you have to carry out field work, such as maintenance and assembly / disassembly.
  For this type of work, very short operations are enough to obtain high hydraulic pressures (eg 700 bar correspond to a force of approximately 25ton).
- Having such hydraulic power through an extremely portable and compact product allows for fast and effective intervention.

Noise:

- All BELL pumps are silenced with reduced noise to protect the operator and the surrounding environment.
- The silencer present on all pumps maintains a noise level in line with the most rigorous quality standards.

Main fields of application:

- Operation of single and / or double acting cylinders according to the models in the range.
- Use in any hydraulic application, especially in those where there is a need for high pressures and moderate and controllable oil flows, in order to always ensure a certain precision in operations.

Applications:

- From the industrial sector for fixtures, extractors and presses, punchers, crimpers, to the automation sector, clamping, pressure machining, to the automotive sector, lifters, hydraulic ratchets, pulling arms, crosspieces, bead breakers, etc.
- Environments where there is a potential risk of fire or explosion, as the compressed air is in itself compatible with any type of situation.
- Lifting of heavy objects (eg truck / car / motorcycle lifts)
- Automation (clamping of pieces under pressure during automatic precision machining)
- Pressing (eg bearings)
- Extraction (eg bearings)
- Bead breakers (eg tires)
- Tensioning
- Moulding
- Punching
- Cutting of blocked nuts, cables
- Straightening of steel structures (pull benches) and car bodies

All BELL products are designed and manufactured within BELL SRL in via F. De Pisis, 5 - 42124 Reggio Emilia (RE) - Italy, according to the Quality Standards that distinguish the MADE IN ITALY from the Rest of the World.

HP series

	HP ***Single acting, pedal operated, oil flow rates from 2.1 to 0.1 l / min, oil pressures from 100 to 1,000bar, tank capacities from 1.4L to 4L***
	HP-AP ***Single acting, stall / restart continuous cycle operation, pneumatic RC valve for release, oil flow rates from 2.1 to 0.1 l / min, oil pressures from 100 to 1,000bar, tank capacities from 1.4L to 4L***
	HP-RC ***Single acting, double pneumatic RC valve for advance / release, oil flow rates from 2.1 to 0.1 l / min, oil pressures from 100 to 1,000bar, tank capacities from 1.4L to 4L***
	HP-REMOTE ***Single acting, pneumatic remote control 2 push / release buttons, oil flow rates from 2.1 to 0.1 l / min, oil pressures from 100 to 1,000bar, tank capacities from 1.4L to 4L***
	HP-LEVER ***Single acting, manual lever operation, oil flow rates from 2.1 to 0.1 l / min, oil pressures from 100 to 1,000bar, tank capacities from 1.4L to 4L***

THE BELL AIR HYDRAULIC PUMPS OF THE HP SERIES ARE DESIGNED TO USE HYDRAULIC OILS OR GLYCOLS FOR THE OPERATION OF SINGLE ACTING CYLINDERS WITH SPRING RETURN. HIGH OIL PRESSURES UP TO 1,000 BAR, LARGE FLOWS (l / min) AND EXTREMELY COMPACT DIMENSIONS.

THESE ARE REAL POWER UNITS THAT CAN REPLACE ELECTRO-HYDRAULIC CONTROL UNITS IN MANY FIELDS OF APPLICATION

- They can also operate double-acting cylinders with 4-way distributor valve (optional).
- Orienting oil port for easy hydraulic connections.
- Connectable to the normal 5/8 pneumatic network (max 10 bar)
- Built-in differential type release valve, hydraulically balanced to eliminate opening shocks and allow a fast and controlled oil return
- Replaceable internal air filter, as well as an externally adjustable relief valve for the protection of the circuit components.
- HP version with 3-position pedal for advance / hold / release.
- HP-RC version for pneumatic or remote operation (HP-Remote) via manual button control.
- HP-Lever version for convenient manual lever operation (ideal for crimpers and bench work).
- HP-AP version for automatic in-line drives (ideal for locking systems, automations).

Air consumption diagrams (l / min):

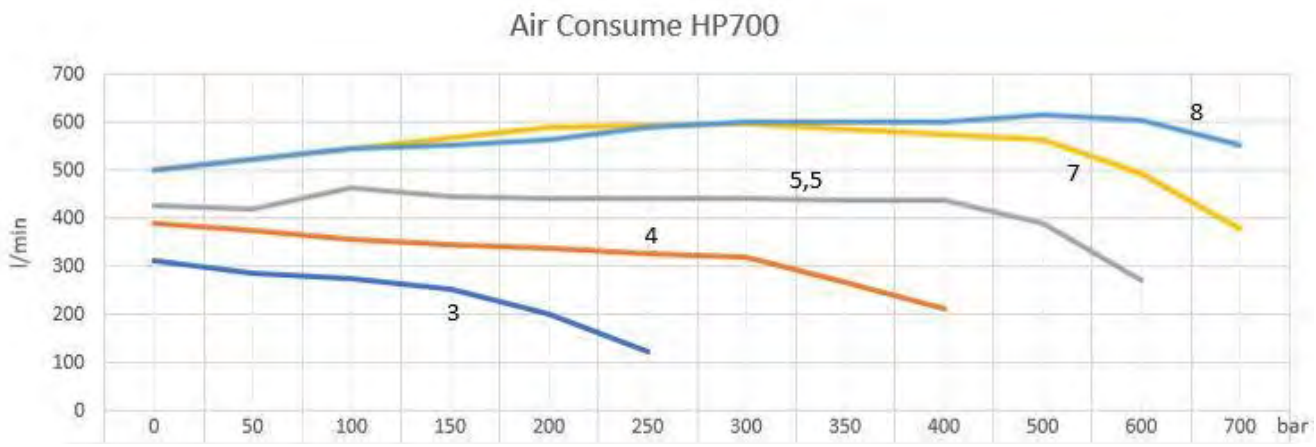

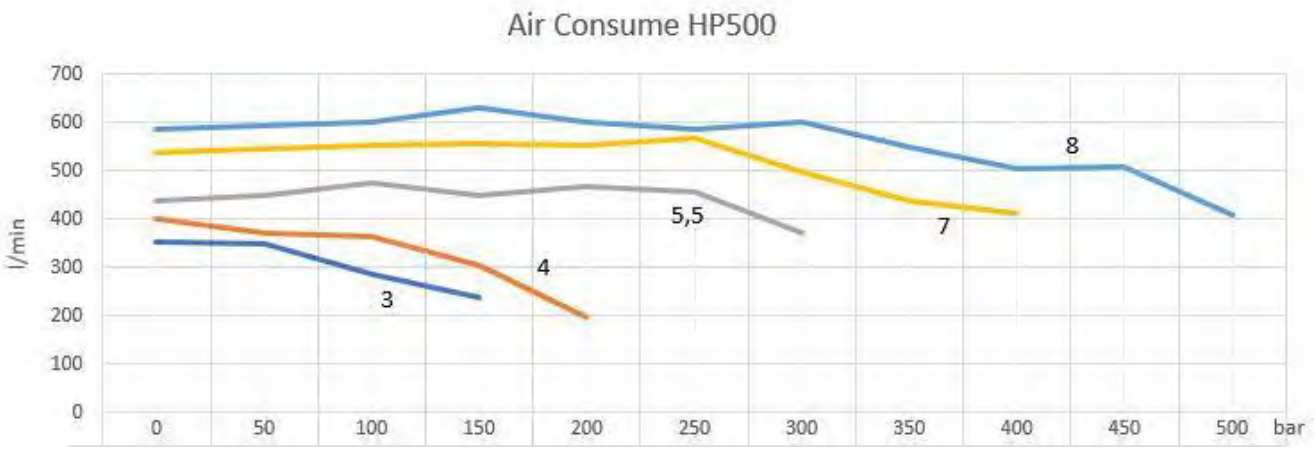

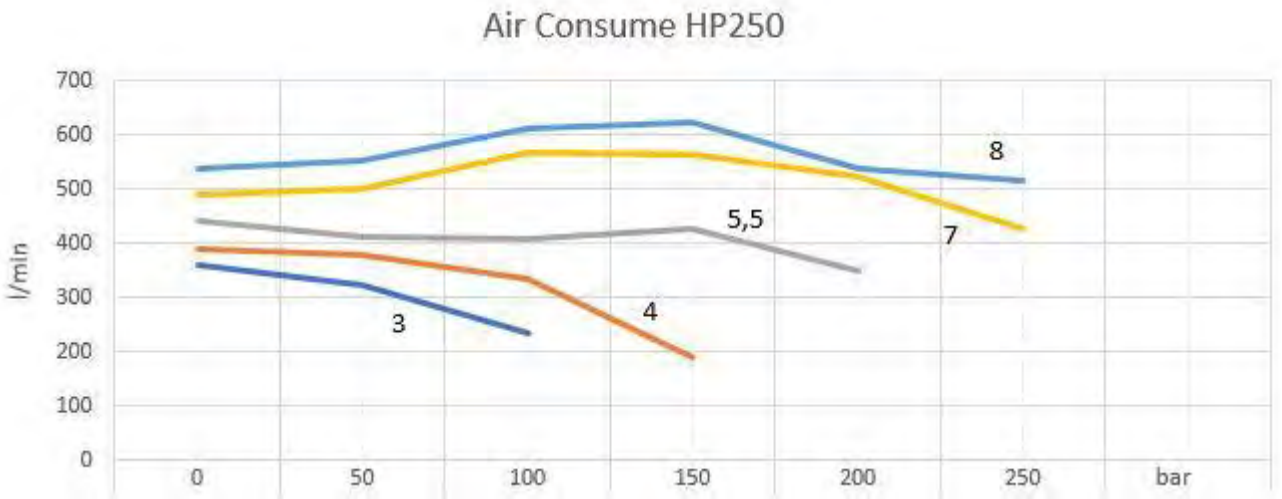

Flow rate diagrams (l / min) - (oil flow):

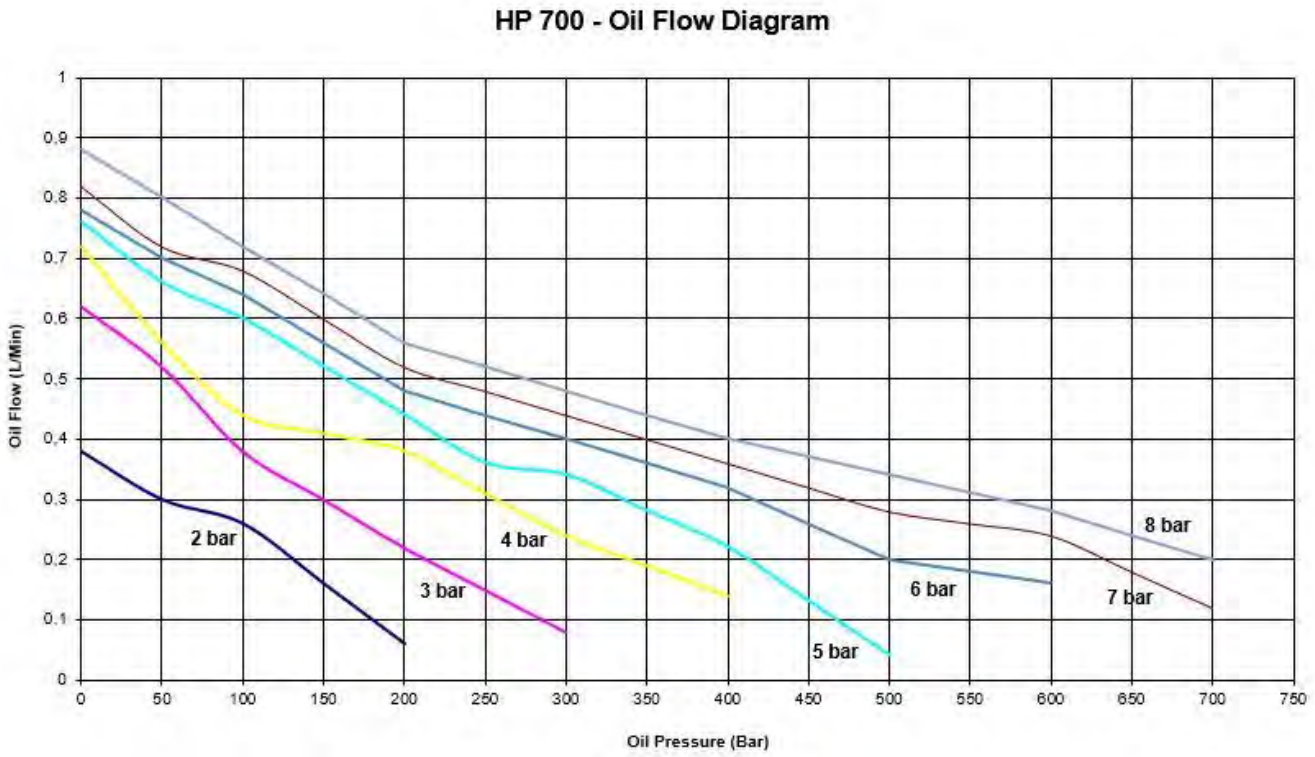

HP500

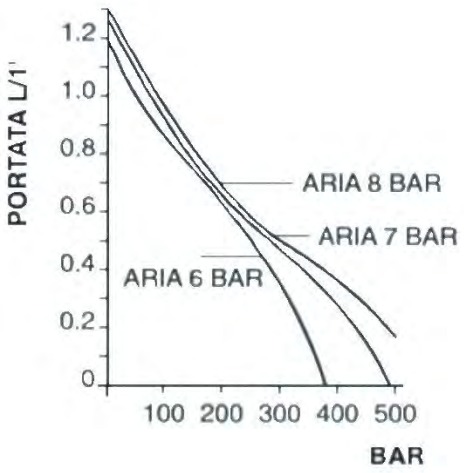

HP250

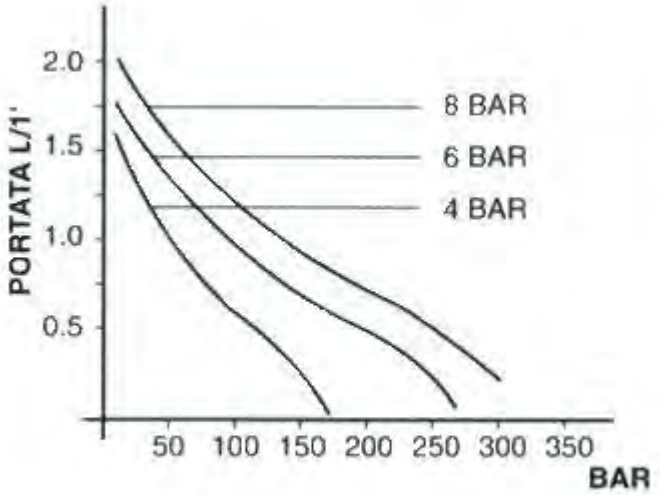

HP

Air-hydraulic pump, single acting, pedal operated, oil flow (l / min): 0,8 / 0,1-1000bar - 0,8 / 0,2-700bar - 1,4 / 0,8-500bar - 2,4 / 0,5-350bar - 2.1 / 0.6-250bar

Series: HP

Product line: Industrial tools, lifting systems, car repairers, clamping systems, hydraulic equipment (presses, jacks, ...), tire changers, Automotive

- **Operated through pedal**
- **Unmistakable pedal design with handle for portability**
- **3-position pedal operation with spring return (advance, hold and return)**
- **Single-acting cylinder compatibility (double-acting with optional in-line distributor)**
- **Compact and sturdy construction for heavy duty and long life**
- **Easy maintenance**
- **No air lubricated required**
- **Connectable to the normal pneumatic network**
- **Versatile use in both horizontal and vertical positions**
- **Helical vent screw on the lid for tank ventilation during use**
- **Preset safety valve on the cover against any overload in the pump**
- **Externally adjustable oil pressure relief valve against any overload**
- **Rotating oil port for easy connection to the hydraulic system and improved mobility**
- **Slots on the base support for easy installation and fixing to the system**
- **Lightweight**
- **Low noise (80dBa)**
- **1.4 L tank capacity for small and large cylinders (other versions available SL 2.5l and XL 4L)**

Technical features and Series comparison:

Max working pressure (bar):	250	350	500	700	1000
Cylinder compatibility:	Single effect Double effect through in line hand valve (optional)				
Oil tank capacity (L):	1,4 – 2,5 - 4				
Usable oil (L):	1,1 – 2,15 – 3,5				
Max flow rate at nominal pressure (l / min):	0,6	0,5	0,8	0,2	0,1
Oil flow without load (l / min):	2,1	2,4	1,4	0,8	0,8
Oil flow with load (l / min):	0,6	0,5	0,8	0,2	0,1
Oil port:	3/8”NPTF (G3/8” – G1/4”)				
Air port:	G1/4”				
Valve function:	Advance / hold / release				
Valve operation:	Manual				
Energy source:	Air				
Pneumatic range (bar):	5/8-10max				
Average air consumption (l / min):	345		300	330	400
Noise (dBA):	80				
Weight (Kg):	5,3				

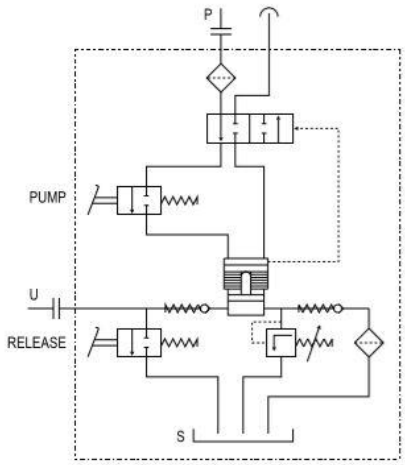

Size:

HP 1,4 L

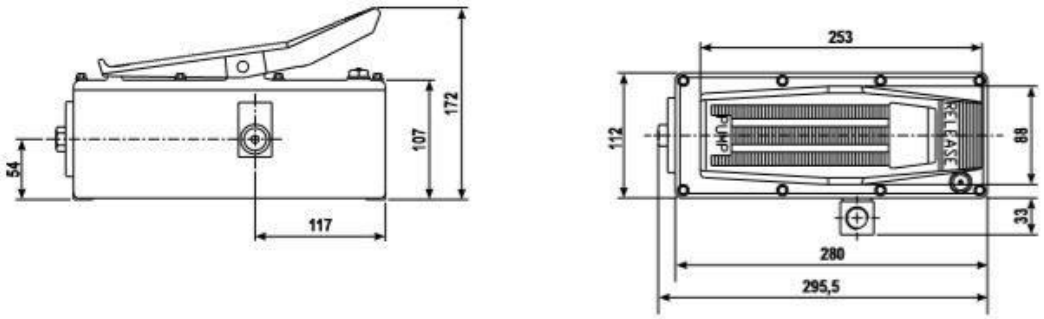

HP-SL 2,5 L

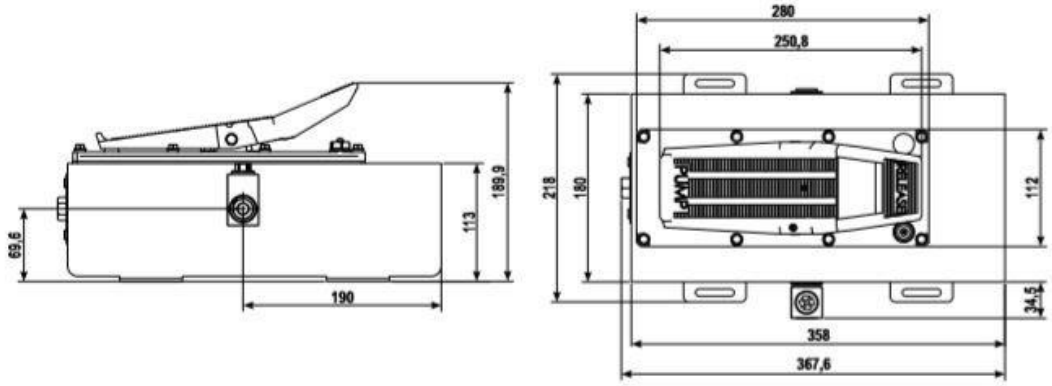

HP-XL 4 L

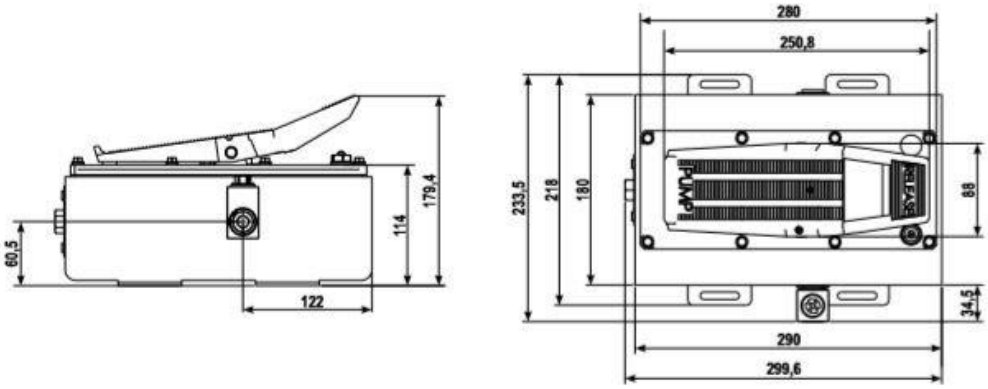

To order:

- P/N 913201640 HP1000 1000BAR BELL
- P/N 913200010 HP700 700BAR 1,4L BELL
- P/N 913200060 HP500 500BAR BELL
- P/N 913202190 HP350 350BAR BELL
- P/N 913200020 HP250 250BAR BELL

Spare parts:

- SEAL KIT HP

Accessories:

- Pedal protection kit
- Oversized tanks SL / XL
- Delivery valve straight fitting
- Hose Flex
- In line hand valve for double acting cylinders

HP series

HP-AP

Air hydraulic pump, single acting, linear pneumatic piston drive, for automatic systems, oil flow (l / min): 0,8 / 0,1-1000bar - 0,8 / 0,2-700bar - 1,4 / 0, 8-500bar - 2,4 / 0,5-350bar - 2,1 / 0,6-250bar

Series: HP

Product line: Industrial tools, clamping systems, automatic systems, continuous and intensive use

- **Pneumatic piston release (optional pneumatic pilot) with brass pin.**
- **Stall / Restart function for automatic systems.**
- **Continuous pressurization of the circuit.**
- **Single-acting cylinder compatibility (double-acting with optional in-line hand valve)**
- **Compact and sturdy construction for heavy duty and long durability.**
- **Easy maintenance.**
- **No air lubricated required.**
- **Connectable to the normal pneumatic network**
- **Versatile use in both horizontal and vertical positions**
- **Helical vent screw on the lid for tank ventilation during use**
- **Preset safety valve on the cover against any overload in the pump**
- **Externally adjustable oil pressure relief valve against any overload**
- **Rotating oil port for easy connection to the hydraulic system and improved mobility**
- **Slots on the base support for easy installation and fixing to the system**
- **Lightweight**
- **Low noise (80dBa)**
- **1.4 L tank capacity for small and large cylinders (other versions available SL 2.5l and XL 4L)**

Technical features and Series comparison:

Max working pressure (bar):	250	350	500	700	1000
Cylinder compatibility:	Single effect Double effect through in line hand valve (optional)				
Oil tank capacity (L):	1,4 – 2,5 - 4				
Usable oil (L):	1,1 – 2,15 – 3,5				
Max flow rate at nominal pressure (l / min):	0,6	0,5	0,8	0,2	0,1
Oil flow without load (l / min):	2,1	2,4	1,4	0,8	0,8
Oil flow with load (l / min):	0,6	0,5	0,8	0,2	0,1
Oil port:	3/8”NPTF (G3/8” – G1/4”)				
Air port:	G1/4”				
Valve function:	Hold/Release				
Valve operation:	Pneumatic				
Energy source:	Stall /Restart				
Pneumatic range (bar):	Air				
Average air consumption (l / min):	5/8-10max				
Noise (dBA):	345		300	330	400
Weight (Kg):	80				
Valve function:	5,3				

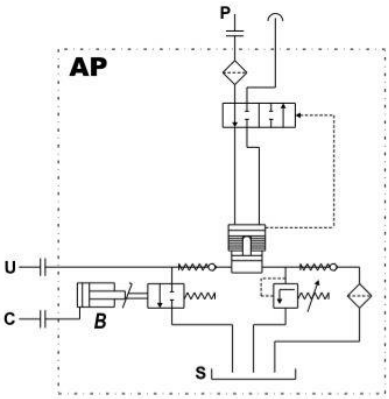

Size:

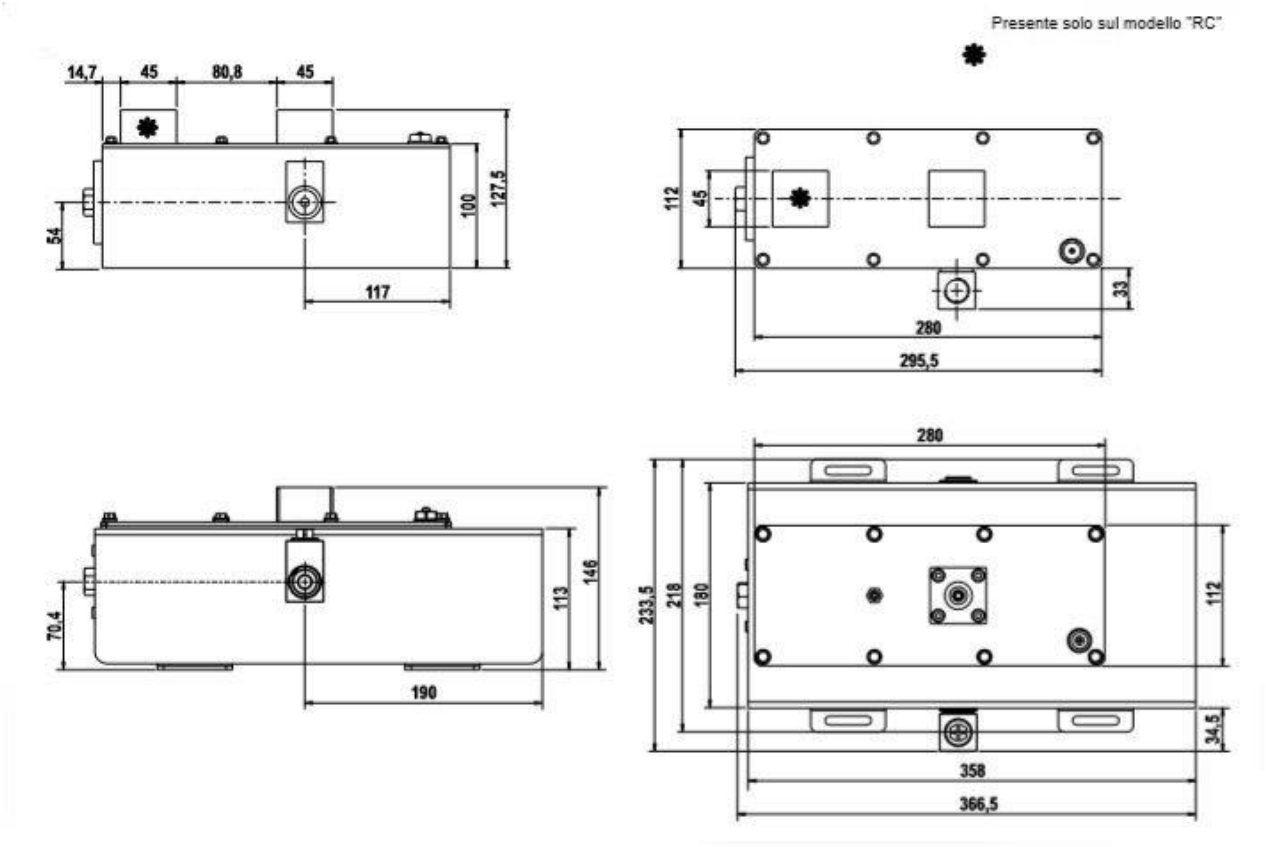

To order:

- P/N 913201650 HP1000 AP 1000BAR BELL
- P/N 913200070 HP700 AP 700BAR 1,4L BELL
- P/N 913201540 HP500 AP 500BAR BELL
- P/N 91320219X HP350 AP 350BAR BELL
- P/N 913200050 HP250 AP 250BAR BELL

Spare parts:

- SEAL KIT HP AP

Accessori:

- Oversized tanks SL / XL
- Delivery valve straight fitting
- Hose Flex
- In line hand valve for double acting cylinders

HP series

HP-RC

Air-hydraulic pump, single acting, pneumatically operated, oil flow (l / min): 0,8 / 0,1-1000bar - 0,8 / 0,2-700bar - 1,4 / 0,8-500bar - 2,4 / 0,5-350bar - 2,1 / 0,6-250bar

Series: HP

Product line: Industrial tools, clamping systems, plants

- **Pneumatic piston drive (optional pneumatic pilot) with brass pin**
- **Single-acting cylinder compatibility (double-acting with optional in-line hand valve)**
- **Compact and sturdy construction for heavy duty and long durability.**
- **Easy maintenance.**
- **No air lubricated required.**
- **Connectable to the normal pneumatic network**
- **Versatile use in both horizontal and vertical positions**
- **Helical vent screw on the lid for tank ventilation during use**
- **Preset safety valve on the cover against any overload in the pump**
- **Externally adjustable oil pressure relief valve against any overload**
- **Rotating oil port for easy connection to the hydraulic system and improved mobility**
- **Slots on the base support for easy installation and fixing to the system**
- **Lightweight**
- **Low noise (80dBa)**
- **1.4 L tank capacity for small and large cylinders (other versions available SL 2.5l and XL 4L)**

Technical features and Series comparison:

Max working pressure (bar):	250	350	500	700	1000
Cylinder compatibility:	Single effect Double effect through in line hand valve (optional)				
Oil tank capacity (L):	1,4 – 2,5 - 4				
Usable oil (L):	1,1 – 2,15 – 3,5				
Max flow rate at nominal pressure (l / min):	0,6	0,5	0,8	0,2	0,1
Oil flow without load (l / min):	2,1	2,4	1,4	0,8	0,8
Oil flow with load (l / min):	0,6	0,5	0,8	0,2	0,1
Oil port:	3/8”NPTF (G3/8” – G1/4”)				
Air port:	G1/4”				
Valve function:	Advance / hold / release				
Valve operation:	Pneumatic				
Energy source:	Air				
Pneumatic range (bar):	5/8-10max				
Average air consumption (l / min):	345		300	330	400
Noise (dBA):	80				
Weight (Kg):	5,3				

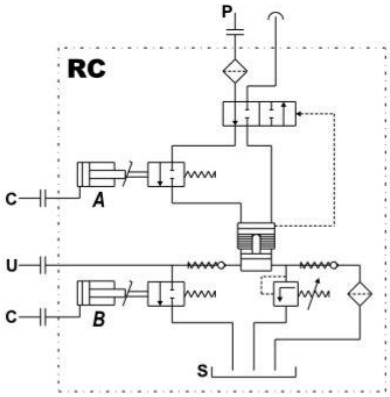

Size:

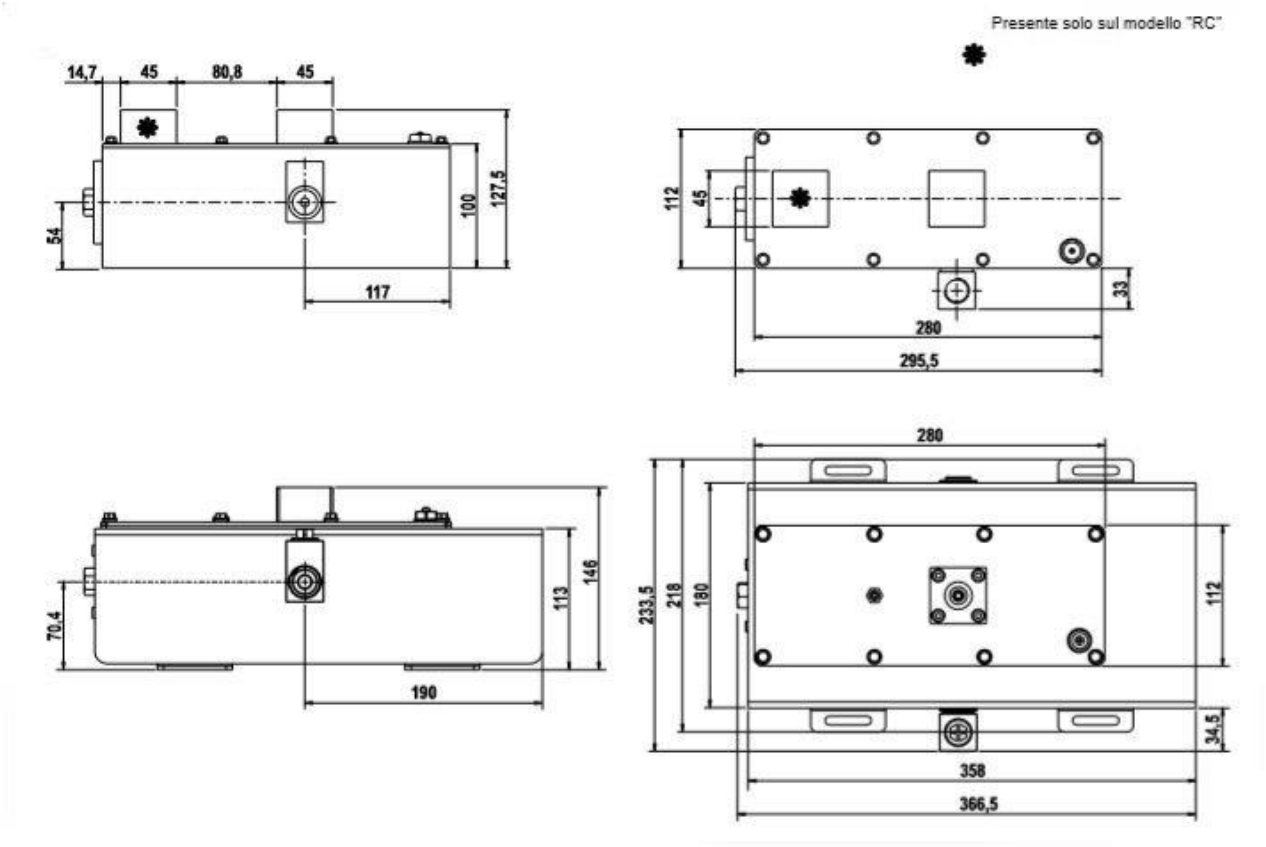

To order:

- P/N 913201660 HP1000 RC 1000BAR BELL
- P/N 913200090 HP700 RC 700BAR 1,4L BELL
- P/N 913200200 HP500 RC 500BAR BELL
- P/N 9132021XX HP350 RC 350BAR BELL
- P/N 913200100 HP250 RC 250BAR BELL

Spare parts:

- SEAL KIT HP RC

Accessories:

- Oversized tanks SL / XL
- Delivery valve straight fitting
- Hose Flex
- In line hand valve for double acting cylinders

HP-REMOTE

Air-hydraulic pump, remote control operation, ergonomic push-button panel, pneumatic connection length 3m, oil flow rate (l / min): 0,8 / 0,1-1000bar - 0,8 / 0,2-700bar - 1,4 / 0 , 8-500bar – 2,4 / 0,5-350bar - 2.1 / 0.6-250bar

Series: HP

Product line: Industrial tools, bodywork, car repairers, lifting systems

- **Pneumatic piston drive with brass pins**
- **Pneumatic piloting with remote control with 2 or 3 buttons (safety / critical stop)**
- **Ergonomic handle for easy handling and transport**
- **Pneumatic connection to the push-button panel standard length 3m (other lengths on demand)**
- **Single-acting cylinder compatibility (double-acting with optional in-line hand valve)**
- **Compact and sturdy construction for heavy duty and long durability.**
- **Easy maintenance.**
- **No air lubricated required.**
- **Connectable to the normal pneumatic network**
- **Versatile use in both horizontal and vertical positions**
- **Helical vent screw on the lid for tank ventilation during use**
- **Preset safety valve on the cover against any overload in the pump**
- **Externally adjustable oil pressure relief valve against any overload**
- **Rotating oil port for easy connection to the hydraulic system and improved mobility**
- **Slots on the base support for easy installation and fixing to the system**
- **Lightweight**
- **Low noise (80dBa)**
- **1.4 L tank capacity for small and large cylinders (other versions available SL 2.5l and XL 4L)**

Technical features and Series comparison:

Max working pressure (bar):	250	350	500	700	1000
Cylinder compatibility:	Single effect Double effect through in line hand valve (optional)				
Oil tank capacity (L):	1,4 – 2,5 - 4				
Usable oil (L):	1,1 – 2,15 – 3,5				
Max flow rate at nominal pressure (l / min):	0,6	0,5	0,8	0,2	0,1
Oil flow without load (l / min):	2,1	2,4	1,4	0,8	0,8
Oil flow with load (l / min):	0,6	0,5	0,8	0,2	0,1
Oil port:	3/8”NPTF (G3/8” – G1/4”)				
Air port:	G1/4”				
Valve function:	Advance / hold / release				
Valve operation:	Manual				
Energy source:	Air				
Pneumatic range (bar):	5/8-10max				
Average air consumption (l / min):	345		300	330	400
Noise (dBA):	80				
Weight (Kg):	5,3				

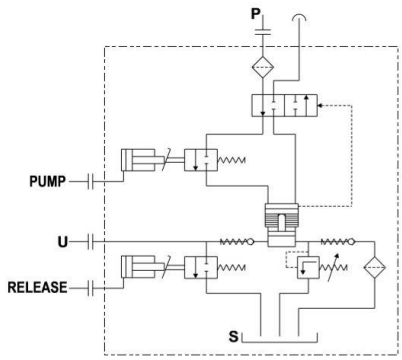

Size:

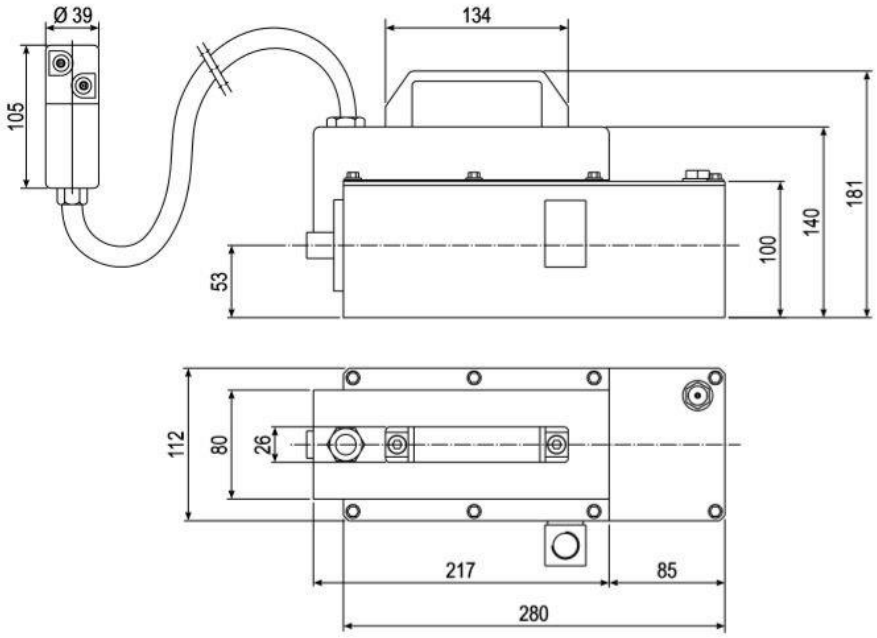

To order:

- P/N 913201660 HP1000 RC 1000BAR BELL
- P/N 913200090 HP700 RC 700BAR 1,4L BELL
- P/N 913200200 HP500 RC 500BAR BELL
- P/N 9132021XX HP350 RC 350BAR BELL
- P/N 913200100 HP250 RC 250BAR BELL

Spare parts:

- SEAL KIT HP RC

Accessories:

- Oversized tanks SL / XL
- Delivery valve straight fitting
- Hose Flex
- In line hand valve for double acting cylinders

HP-LEVER

Air-hydraulic pump, single acting, manually operated, ergonomic handle, oil flow (l / min): 0,8 / 0,1-1000bar - 0,8 / 0,2-700bar - 1,4 / 0,8-500bar - 2,4 / 0,5-350bar - 2,1 / 0,6-250bar

Series: HP

Product line: Industrial tools, bench machining, crimpers, hydraulic presses

- **Operated manually through lever**
- **Ergonomic lever handle for a safe and comfortable grip**
- **Pneumatic build up, hold and release function**
- **No effort on the lever (pneumatic energy source)**
- **Single-acting cylinder compatibility (double-acting with optional in-line hand valve)**
- **Compact and sturdy construction for heavy duty and long durability.**
- **Easy maintenance.**
- **No air lubricated required.**
- **Connectable to the normal pneumatic network**
- **Versatile use in both horizontal and vertical positions**
- **Helical vent screw on the lid for tank ventilation during use**
- **Preset safety valve on the cover against any overload in the pump**
- **Externally adjustable oil pressure relief valve against any overload**
- **Rotating oil port for easy connection to the hydraulic system and improved mobility**
- **Slots on the base support for easy installation and fixing to the system**
- **Lightweight**
- **Low noise (80dBa)**
- **1.4 L tank capacity for small and large cylinders (other versions available SL 2.5l and XL 4L)**

Technical features and Series comparison:

Max working pressure (bar):	250	350	500	700	1000
Cylinder compatibility:	Single effect Double effect through in line hand valve (optional)				
Oil tank capacity (L):	1,4 – 2,5 - 4				
Usable oil (L):	1,1 – 2,15 – 3,5				
Max flow rate at nominal pressure (l / min):	0,6	0,5	0,8	0,2	0,1
Oil flow without load (l / min):	2,1	2,4	1,4	0,8	0,8
Oil flow with load (l / min):	0,6	0,5	0,8	0,2	0,1
Oil port:	3/8”NPTF (G3/8” – G1/4”)				
Air port:	G1/4”				
Valve function:	Advance / hold / release				
Valve operation:	Manual				
Energy source:	Air				
Pneumatic range (bar):	5/8-10max				
Average air consumption (l / min):	345		300	330	400
Noise (dBA):	80				
Weight (Kg):	5,3				

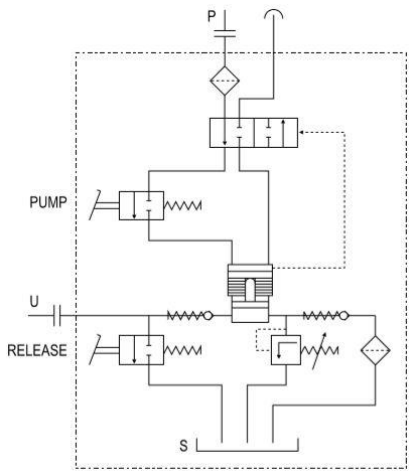

Size:

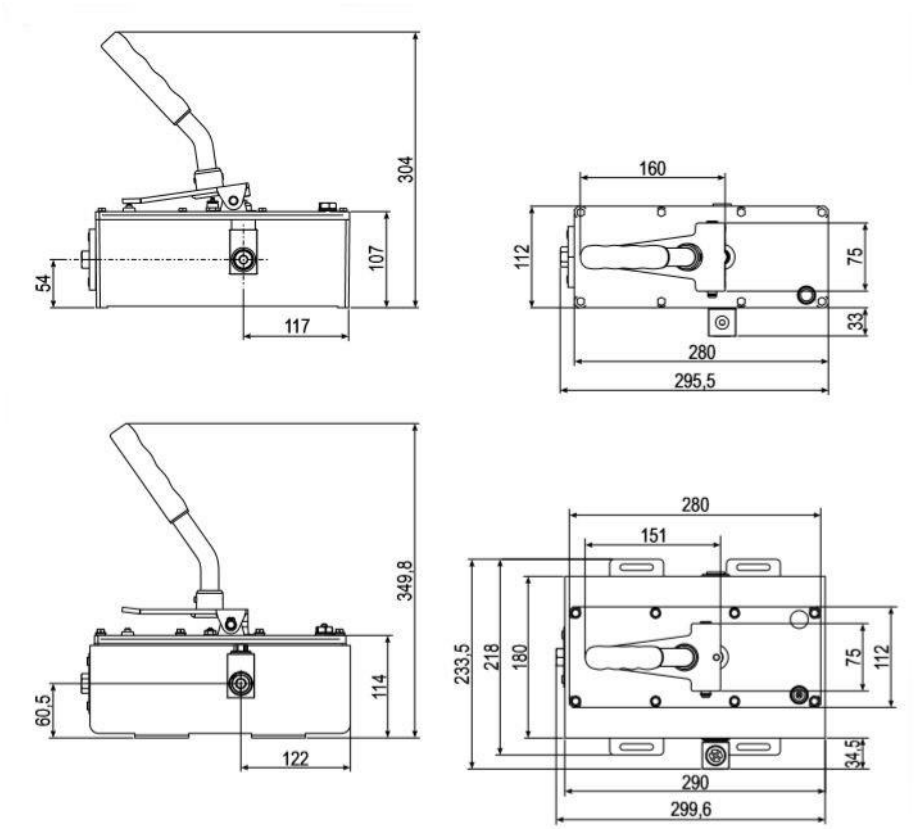

To order:

- P/N 913201950 HP1000 LEVER 1000BAR BELL
- P/N 913201240 HP700 LEVER 700BAR 1,4L BELL
- P/N 913201860 HP500 LEVER 500BAR BELL
- P/N 9132021XX HP350 LEVER 350BAR BELL
- P/N 913201400 HP250 LEVER 250BAR BELL

Spare parts:

- SEAL KIT HP

Accessories:

- Oversized tanks SL / XL
- Delivery valve straight fitting
- Hose Flex
- In line hand valve for double acting cylinders

Ultra AirPump

UPF
Air hydraulic pump, single acting, foot operated, oil flow rates from 2.6 to 0.14 l / min, oil pressures from 100 to 1.000bar, tank capacity from 2.4L to 20L

UPC
Air-hydraulic pump, double acting, CETOP 3 connection, oil flow rates from 2.6 to 0.14 l / min, oil pressures from 100 to 1.000bar, tank capacity from 2.4L to 20L

UPL
Air hydraulic pump, single acting, linear pneumatic piston drive, for automatic systems, with pressure gauge, oil flow rates from 2.6 to 0.14 l / min, oil pressures from 100 to 1.000bar, tank capacity from 2.4L to 20L

UPM
Air hydraulic pump, double acting, CETOP 3 connection, with 4/3 distributor valve, oil flow rates from 2.6 to 0.14 l / min, oil pressures from 100 to 1.000bar, tank capacity from 2.4L to 20L

UPR
Air-hydraulic pump, simple and double-acting, remote control operation, ergonomic push-button panel, pneumatic connection length 3m, oil flow rates from 2.6 to 0.14 l / min, oil pressures from 100 to 1.000bar, tanks capacity from 2.4L to 20L

UPD
Air-hydraulic pump, single and double acting, double pneumatic motor, single / double acting, pedal operated, lever distributor valve (4/3), remote control 3m, oil flow rates from 8.5 to 0.26 l / min, pressures oil from 100 to 700bar, tank capacity from 10L to 30L

UPHC
Air hydraulic pump, single acting, independent and simultaneous hydraulic locks, manual / pneumatic drive, oil flow rates from 2.6 to 0.7 l / min, oil pressures from 100 to 400bar, tank capacity 2.4L

UMP
Air-hydraulic pump, single and double acting, double piston in line, double pedal actuation and lever distributor valve, oil flow 0.29 (l / min) at 250bar, tank capacity 5L

THE UP SERIES BELL AIR HYDRAULIC PUMPS DELIVER HIGH PERFORMANCE FOR A GREATER EFFICIENCY THANKS TO HIGH OIL PRESSURES (UP TO 1,000 BAR), LARGE FLOWS (l / min) AND LARGE OIL CAPACITIES (FROM 2.4 UP TO 20 L)

THESE ARE REAL POWER UNITS THAT CAN REPLACE ELECTRO-HYDRAULIC CONTROL UNITS IN MANY FIELDS OF APPLICATION

- Designed to work even at operating pressures of 1,000 bar in a continuous cycle.
- Designed to use hydraulic fluids and glycols, for the operation of single and / or double acting cylinders depending on the configuration.
- Connectable to the normal pneumatic network 2.8 / 8.3 (max 10 bar)
- Replaceable internal air filter, as well as an externally adjustable relief valve for the protection of the circuit components.
- UPC version (Ultra Air Pump CETOP configuration) it is possible to operate the unit remotely through valves with electric, hydraulic or pneumatic control (optional).
- UPF version (Ultra Air Pump PEDAL configuration) the release valve for discharging the pressurized oil is built into the unit and is operated by the pedal. This valve is hydraulically balanced to eliminate valve opening shocks and allows a fast and controlled return of the flow. The oil pressure obtained is not affected by a possible pressure drop in the air duct, even if the pneumatic network is disconnected
- UPR (Ultra Air Pump REMOTE configuration) and UPRD (REMOTE DOUBLE) version for drives with remote control for single and double acting cylinders
- UPM version (Ultra Air Pump MANUAL configuration) equipped with a lever distributor valve to control the flow of oil from one branch to the other of the double-acting cylinder
- UPHC version (Ultra Air Pump HYDRAULIC CYLINDERS configuration) to drive up to five single-acting actuators simultaneously
- UPD version (Ultra Air Pump DOUBLE MOTOR) with double pneumatic motor for large oil capacities and high flow rates at any pressure.
- Versione UMP (Ultra MINING Pump) per un utilizzo performante in qualunque condizione gravosa, doppia funzionalità (pedale e deviatore di flusso), manometro integrato, essiccatore e lubrificatore d'aria inclusi.

All BELL products are designed and manufactured within BELL SRL in via F. De Pisis, 5 - 42124 Reggio Emilia (RE) - Italy, according to the Quality Standards that distinguish the MADE IN ITALY from the Rest of the World.

Air consumption diagrams (l / min):

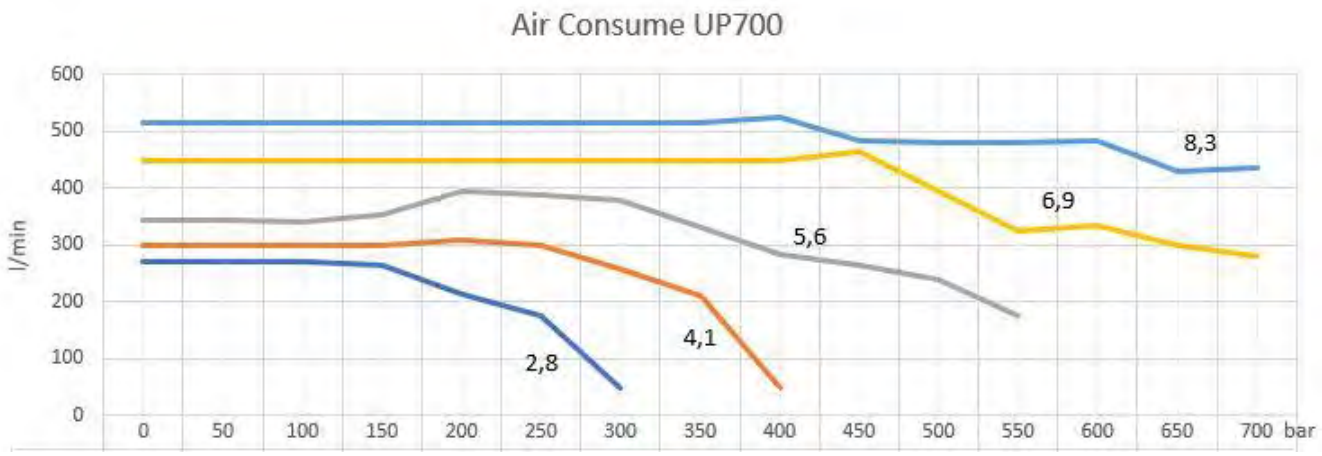

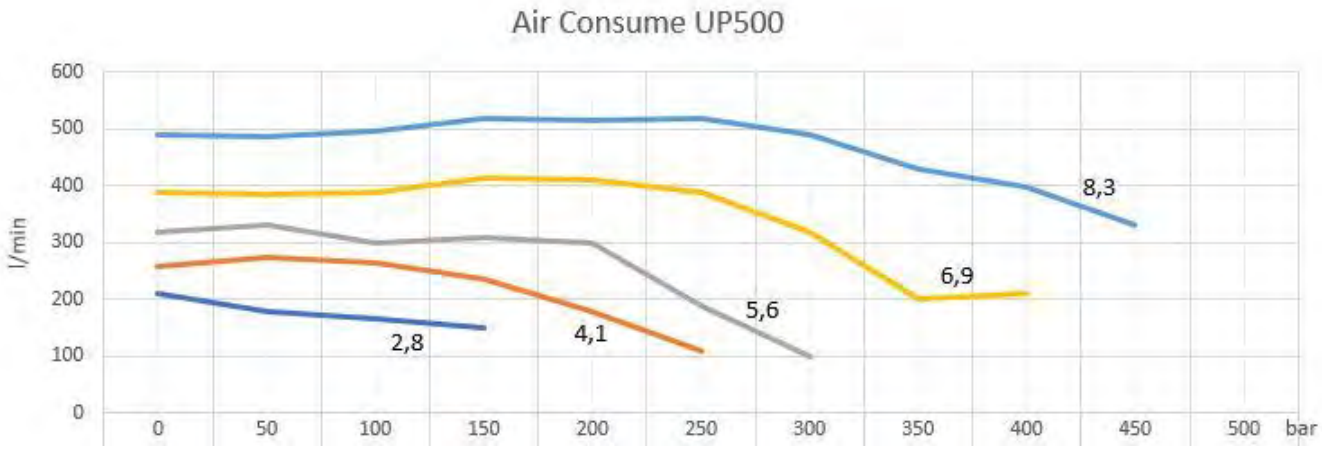

Air Consume UPD Series – Doppio Motore Pneumatico

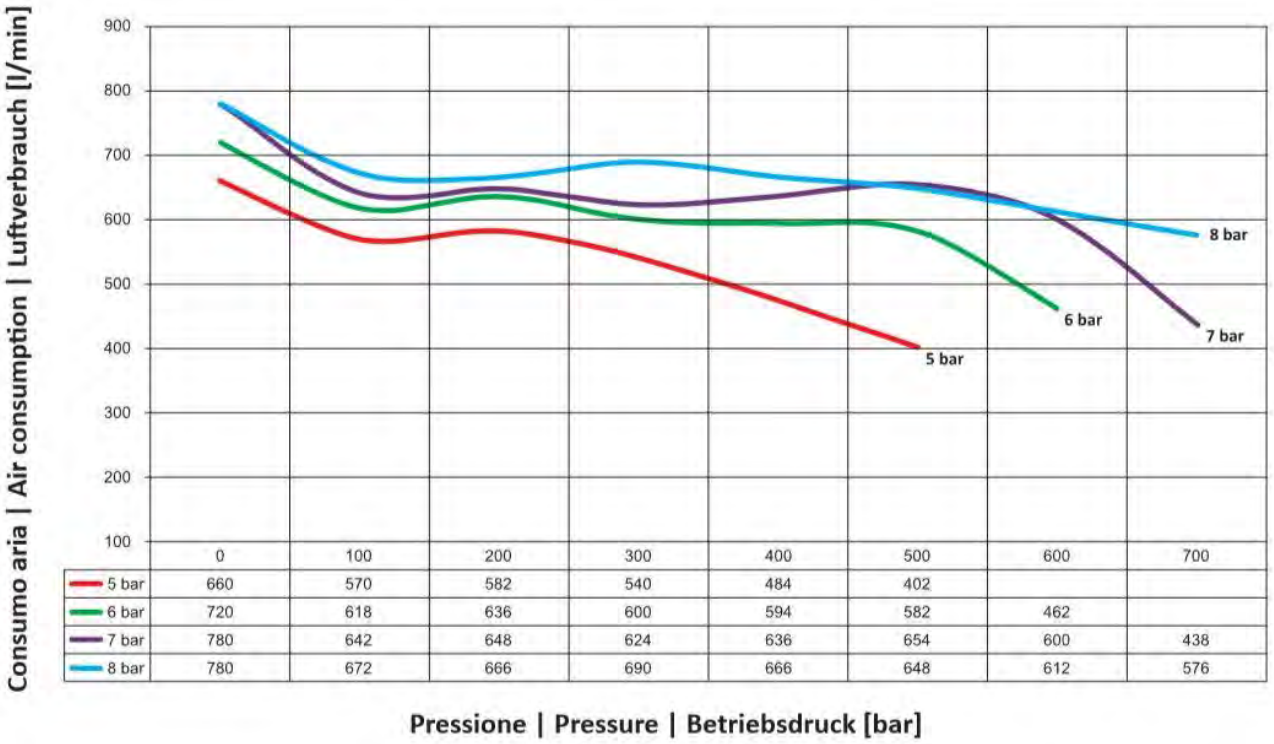

	0	100	200	300	400	500	600	700
5 bar	660	570	582	540	484	402		
6 bar	720	618	636	600	594	582	462	
7 bar	780	642	648	624	636	654	600	438
8 bar	780	672	666	690	666	648	612	576

Flow rate diagrams (l / min) - (oil flow):

UP1000

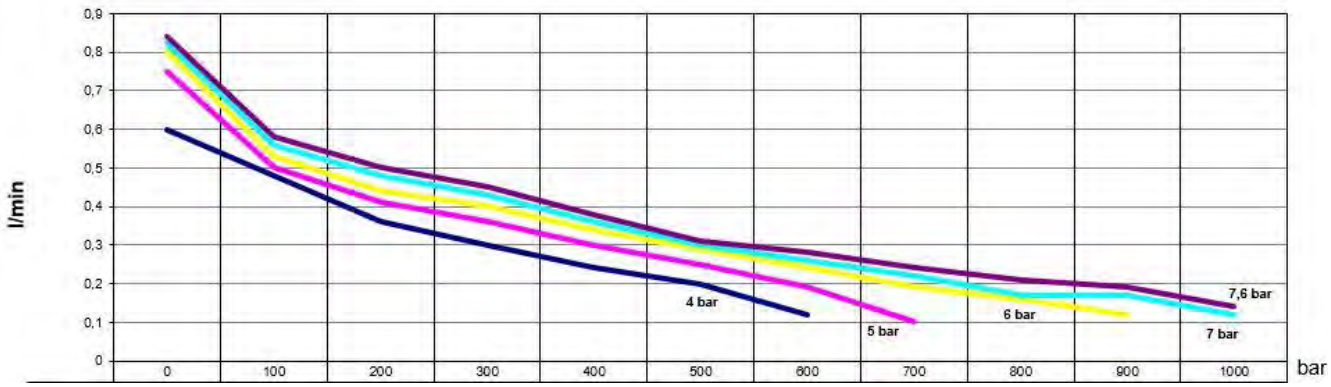

UP700

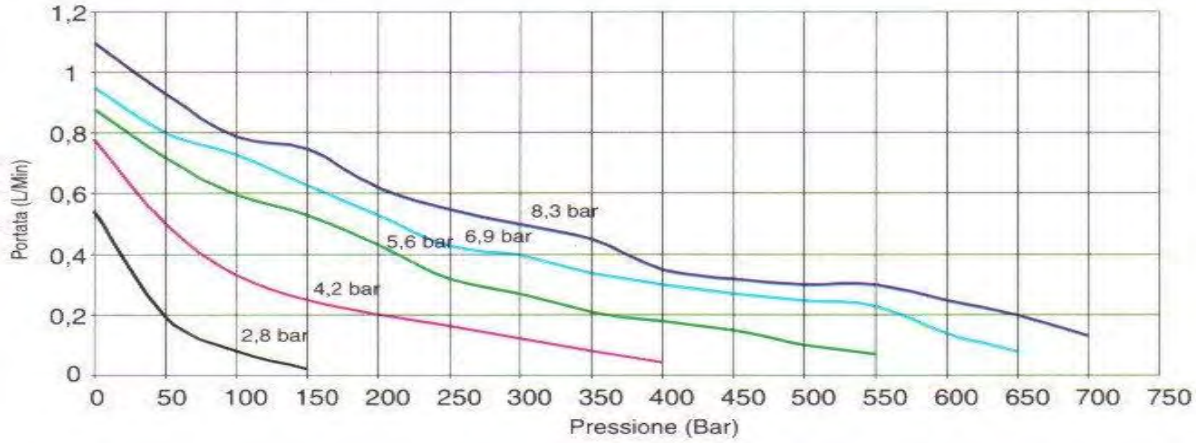

UP500

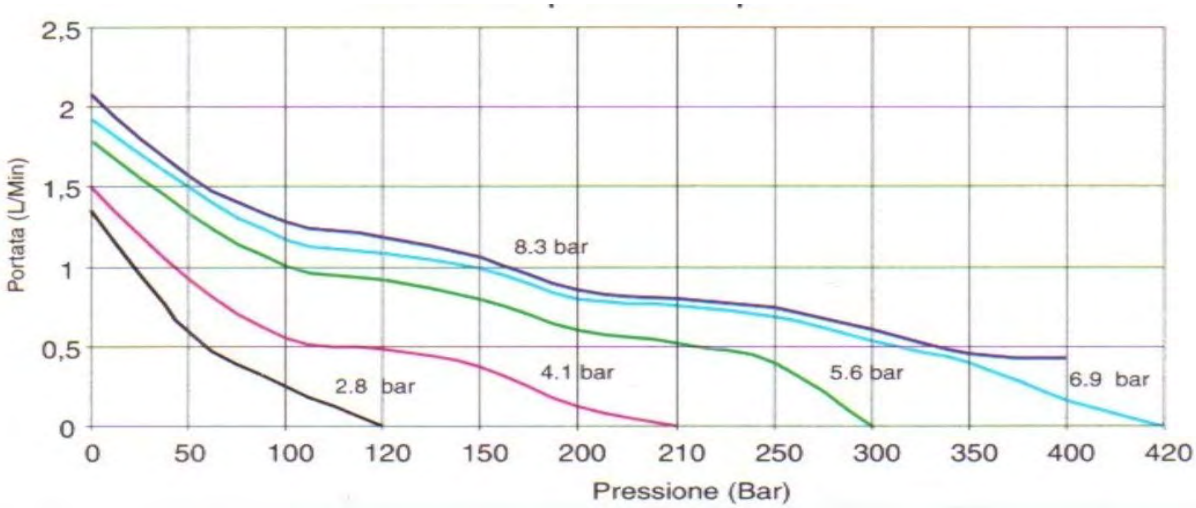

UP400

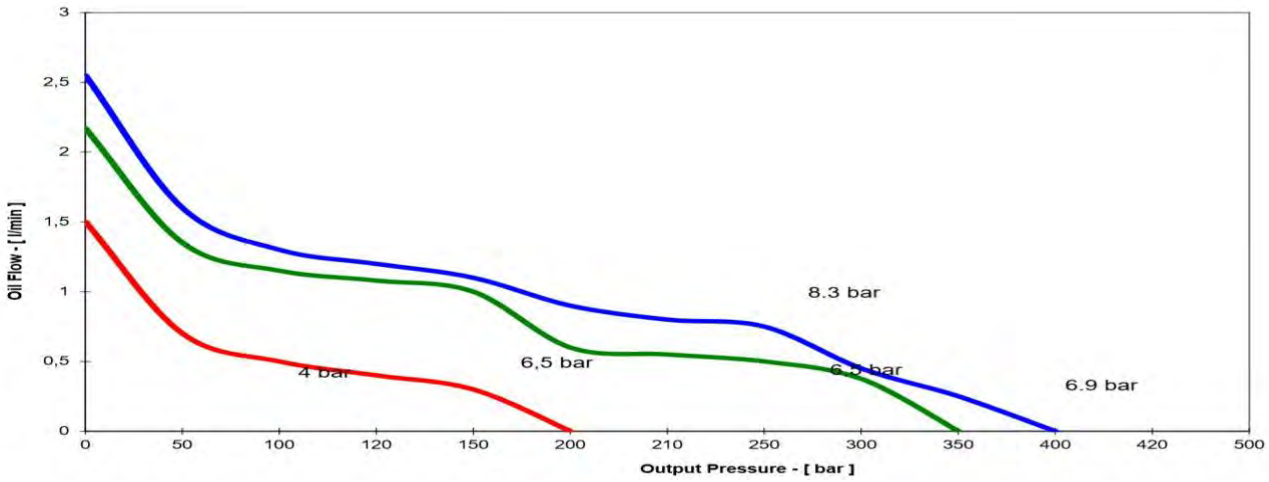

UP250

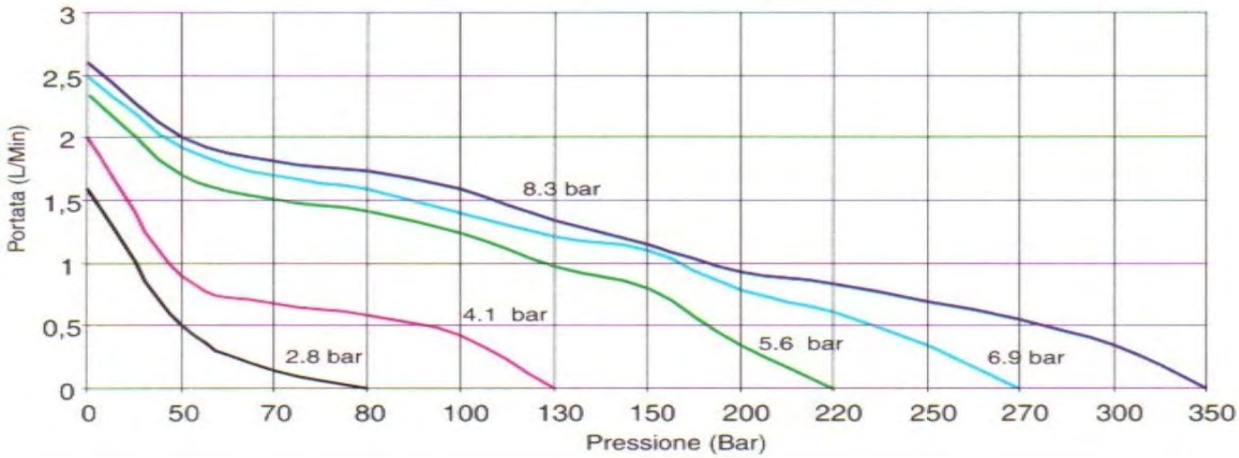

UPD SERIES – Double Air Motor

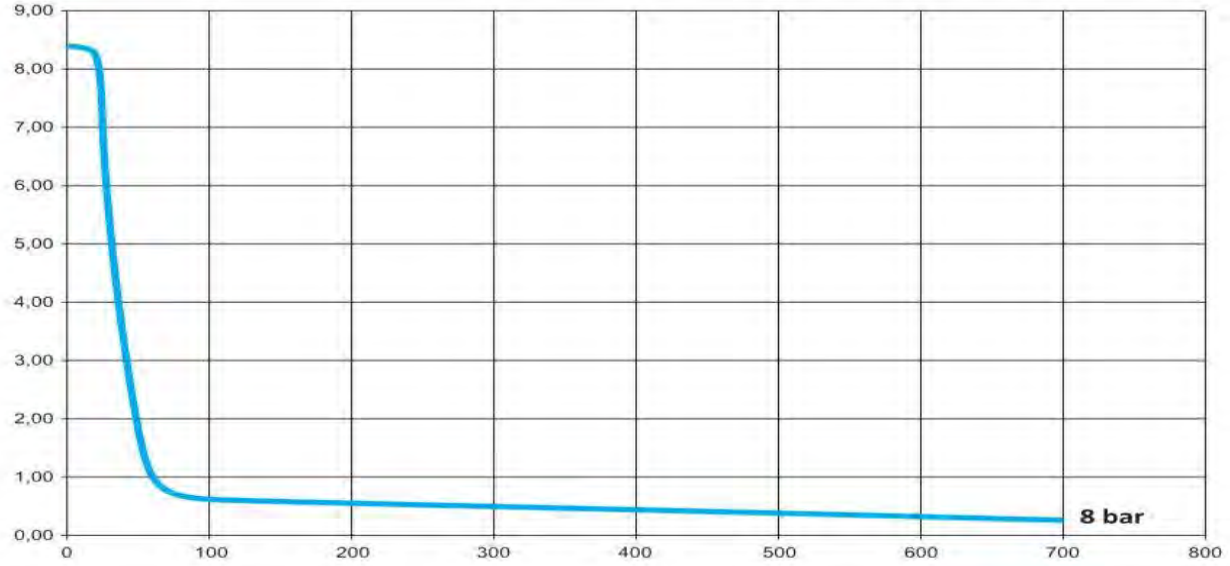

Ultra AirPump

UPF – Ultra Air Pump Foot

Air hydraulic pump, single acting, pedal operated, oil flow (l / min) 0,8 / 0,14 (1000bar) - 1,1 / 0,15 (l / min) to (700bar) - 2,1 / 0 , 2 (500bar) - 2,5 / 0,25 (400bar) - 2,6 / 0,7 (250bar)

Series: UP

Product line: Industrial tools, lifting systems, car repairers, clamping systems, hydraulic equipment (presses, jacks, ...), bead brakers, Automotive

- **Pedal operation**
- **Unmistakable pedal design with integrated handle for portability**
- **3-position pedal operation with spring return (advance, hold and release)**
- **Single-acting cylinder compatibility (double-acting with optional in-line hand valve)**
- **Compact and robust construction for heavy duty and long durability**
- **Easy maintenance**
- **No air lubricated required**
- **It works through the normal pneumatic network**
- **Versatile use in both vertical and horizontal positions**
- **Vent screw on the lid for tank ventilation during use**
- **Relief safety valve on the lid**
- **Maximum oil pressure valve adjustable from the outside to protect the circuit components**
- **Removable pyrex porthole level indicator for maximum easy refill**
- **Slots on the base support for easy installation onto the application**
- **Lightweight**
- **Low noise (75dBa)**
- **Various tank capacities (2.4 - 5 - 10 - 20) L for small and large cylinders**

Technical features:

Max working pressure (bar):	250	400	500	700	1000
Cylinder compatibility:	Single acting Double acting through in-line hand valve (optional)				
Tank capacity (L):	2,4 – 5 – 7 – 10 – 12 – 20				
Usable oil (L):	2,1 – 4,65 – 6,9 – 9,5 – 11,1 – 19,4				
Max flow rate at nominal pressure (l/min):	0,7	0,25	0,2	0,15	0,14
Oil flow without load (l/min):	2,6	2,5	2,1	1,1	0,8
Oil flow with load (l/min):	0,7	0,25	0,2	0,15	0,14
Oil port:	3/8”NPTF (G3/8” – G1/4”)				
Air port:	G1/4”				
Valve function:	Advance / Hold / Release				
Valve operation:	Manual				
Energy source:	Air				
Pneumatic range (bar):	2,8/8,3 (10 max)				
Average air consumption (l/min):	390		320	400	400
Noise (dBA):	75				
Weight (Kg):	6,8				

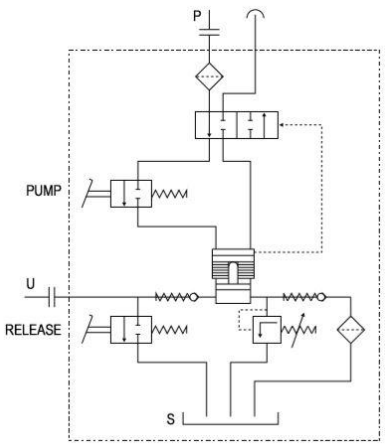

Size:

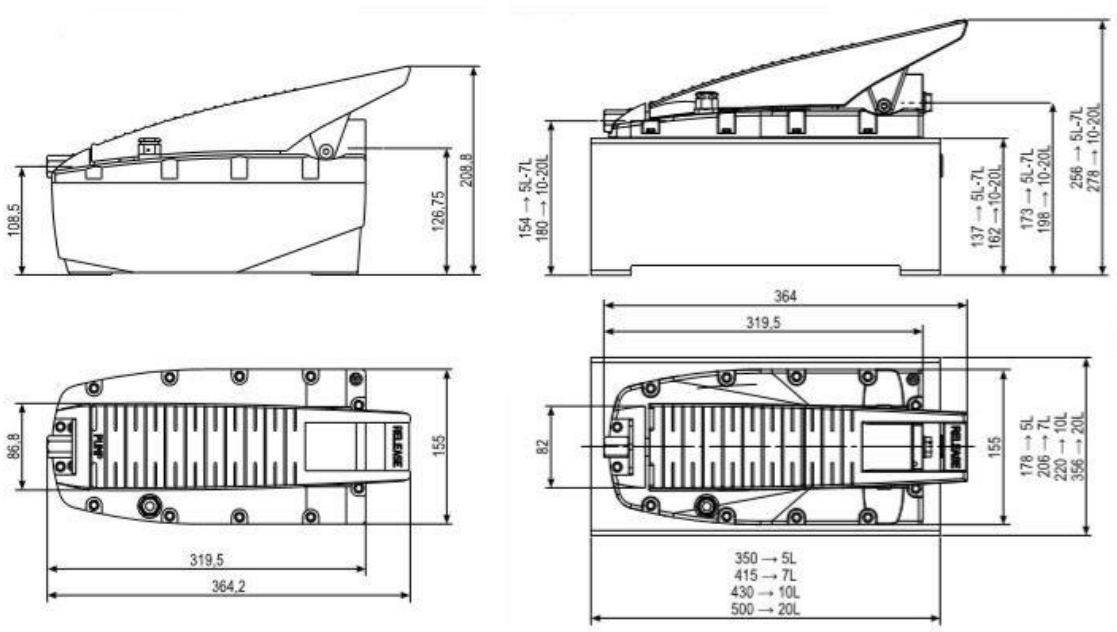

Series comparison:

Type	Max pressure (bar)	Cylinder	Tank (L)	Usable oil (L)	Oil flow unload (l/min)	Oil flow load (l/min)	Air range (bar)	Air consump (l/min)	Weight (kg)
UPF1002	1000	S.E.	2,4	2,1	0,8	0,14	2,8/10		6,8
UPF702	700	S.E.	2,4	2,1	1,1	0,15	2,8/10	50/440	6,5
UPF502	500	S.E.	2,4	2,1	2,1	0,2	2,8/10	110/320	6,8
UPF402	400	S.E.	2,4	2,1	2,5	0,25	2,8/10		6,7
UPF252	250	S.E.	2,4	2,1	2,6	0,7	2,8/10	180/390	6,7
UPF-2V702	700	S.E.	2,4	2,1	1,1	0,15	2,8/10	400	6,5
UPDPF705-16/5	700	S.E./2way	5	4,6	4,9	0,29	2,8/10		18
UPFD710	700	S.E.	10	9	8,5	0,26	4/10	780	23,7
UPFD725	700	S.E.	30	25	8,5	0,26	4/10	780	48,5

To order:

- P/N 915201100 UPF1002 1000BAR BELL
- P/N 915200010 UPF702 700BAR BELL
- P/N 915200030 UPF502 500BAR BELL
- P/N 91520098X UPF402 400BAR BELL
- P/N 915200020 UPF252 250BAR BELL

Accessories:

- Protection pedal kit
- Oversized tank
- Fixing plates
- Quick return kit (only for UPF)
- Fittings
- Hose Flex
- In-line hand valve for double acting cylinders
- Pressure gauge kit

Spare parts: SEAL KIT UPF

UPC – Ultra Air Pump Cetop

Air-hydraulic pump, double acting, CETOP 3 connection, oil flow (l / min) 0,8 / 0,14 (1000bar) - 1,1 / 0,15 (l / min) a (700bar) - 2,1 / 0 , 2 (500bar) - 2.5 / 0.25 (400bar) - 2.6 / 0.7 (250bar)

Series: UP

Product line: Industrial tools, clamping systems, automations

- **Two-position pedal (forward / hold) with lock-up function**
- **CETOP 3 universal connection**
- **Configuration for mounting valves or valve groups (optional)**
- **Double-acting cylinder compatibility (single-acting cylinder operation allowed))**
- **Compact and robust construction for heavy duty and durability**
- **Easy maintenance**
- **No air lubricated required**
- **It works through the normal pneumatic network**
- **Versatile use in both vertical and horizontal positions**
- **Vent screw on the lid for tank ventilation during use**
- **Relief safety valve on the lid**
- **Maximum oil pressure valve adjustable from the outside to protect the circuit components**
- **Removable pyrex porthole level indicator for maximum easy refill**
- **Slots on the base support for easy installation onto the application**
- **Lightweight**
- **Low noise (75dBa)**
- **Various tank capacities (2.4 - 5 - 10 - 20) L for small and large cylinders**

Technical features:

Max working pressure (bar):	250	400	500	700	1000
Cylinder compatibility:	Double acting (Single acting allowed) (optional valve groups)				
Tank capacity (L):	2,4 – 5 – 7 – 10 – 12 – 20				
Usable oil (L):	2,1 – 4,65 – 6,9 – 9,5 – 11,1 – 19,4				
Max flow rate at nominal pressure (l/min):	0,7	0,25	0,2	0,15	0,14
Oil flow without load (l/min):	2,6	2,5	2,1	1,1	0,8
Oil flow with load (l/min):	0,7	0,25	0,2	0,15	0,14
Oil port:	3/8”NPTF (G3/8” – G1/4”)				
Air port:	G1/4”				
Valve function:	Advance/Hold				
Valve operation:	Automatic/Manual				
Energy source:	Air				
Pneumatic range (bar):	2,8/8,3 (10 max)				
Average air consumption (l/min):	390		320	400	400
Noise (dBA):	75				
Weight (Kg):	6,8				

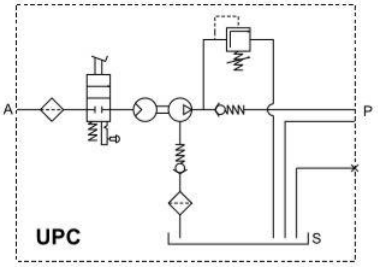

Size:

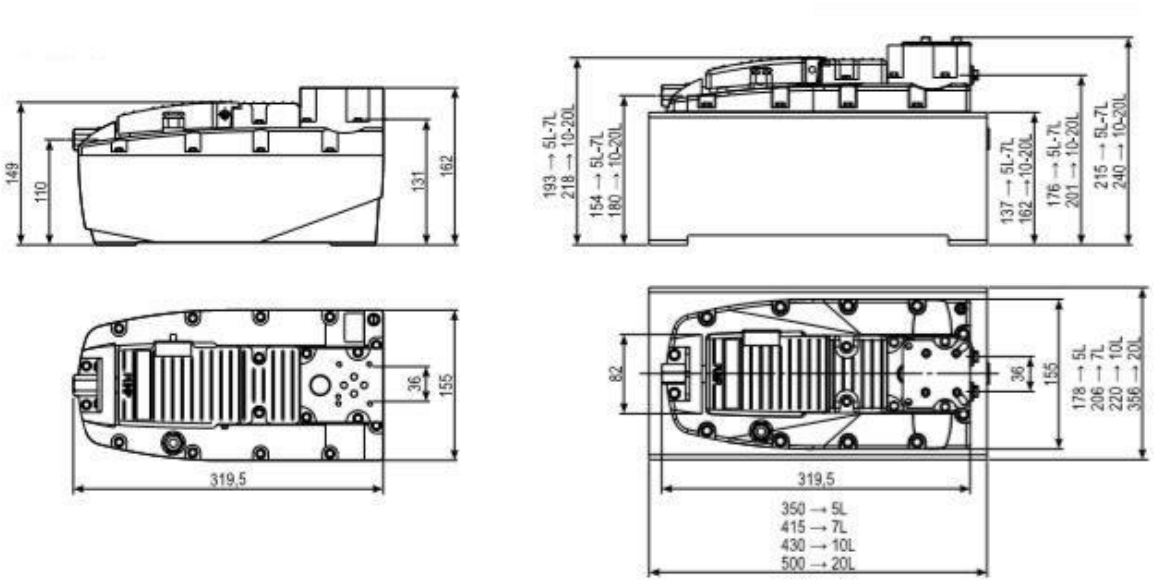

Series Comparison:

Type	Max pressure (bar)	Cylinder	Tank (L)	Usable oil (L)	Oil flow unload (l/min)	Oil flow load (l/min)	Air range (bar)	Air consump (l/min)	Weig ht (kg)
UPC1002	1000	D.E.	2,4	2,1	0,8	0,14	2,8/10		6,8
UPC702	700	D.E.	2,4	2,1	1,1	0,15	2,8/10	50/440	6,5
UPC502	500	D.E.	2,4	2,1	2,1	0,2	2,8/10	110/320	6,8
UPC402	400	D.E.	2,4	2,1	2,5	0,25	2,8/10		6,7
UPC252	250	D.E.	2,4	2,1	2,6	0,7	2,8/10	180/390	6,7

To order:

- P/N 915210510 UPC1002 1000BAR BELL
- P/N 915210080 UPC702 700BAR BELL
- P/N 915210350 UPC502 500BAR BELL
- P/N 915200xxx UPC402 400BAR BELL
- P/N 915210020 UPC252 250BAR BELL

Accessories:

- Oversized tank
- Fixing plates
- Fittings
- Hose Flex
- In-line hand valve

Spare parts

- SEAL KIT UPC

UPL – Ultra Air Pump Linear

UPL1002, Air hydraulic pump, single acting, linear pneumatic piston drive, for automatic systems, with pressure gauge, oil flow (l / min) 0,8 / 0,14 (1000bar) - 1,1 / 0,15 (l / min) at (700bar) - 2.1 / 0.2 (500bar) - 2.5 / 0.25 (400bar) - 2.6 / 0.7 (250bar)

Series: UP

Product line: Industrial tools, clamping systems, automatic systems, continuous and intensive use

- **Two-position pedal (forward / hold) lockable in the forward position**
- **Continuous stall / restart operation for immediate pressure recovery**
- **Single acting cylinder compatibility (double acting with optional in-line valve)**
- **0-1000bar scale pressure gauge housed on the control block**
- **Compact and robust construction for heavy duty and durability**
- **Easy maintenance**
- **No air lubricated required**
- **It works through the normal pneumatic network**
- **Versatile use in both vertical and horizontal positions**
- **Vent screw on the lid for tank ventilation during use**
- **Relief safety valve on the lid**
- **Maximum oil pressure valve adjustable from the outside to protect the circuit components**
- **Removable pyrex porthole level indicator for maximum easy refill**
- **Slots on the base support for easy installation onto the application**
- **Lightweight**
- **Low noise (75dBa)**
- **Various tank capacities (2.4 - 5 - 10 - 20) L for small and large cylinders**

Technical features:

Max working pressure (bar):	250	400	500	700	1000
Cylinder compatibility:	Single acting Double acting through in-line hand valve (optional)				
Tank capacity (L):	2,4 – 5 – 7 – 10 – 12 – 20				
Usable oil (L):	2,1 – 4,65 – 6,9 – 9,5 – 11,1 – 19,4				
Max flow rate at nominal pressure (l/min):	0,7	0,25	0,2	0,15	0,14
Oil flow without load (l/min):	2,6	2,5	2,1	1,1	0,8
Oil flow with load (l/min):	0,7	0,25	0,2	0,15	0,14
Oil port:	3/8”NPTF (G3/8” – G1/4”)				
Air port:	G1/4”				
Valve function:	Advance/Hold				
Valve operation:	Automatic/Manual				
Energy source:	Air				
Pneumatic range (bar):	2,8/8,3 (10 max)				
Average air consumption (l/min):	390		320	400	400
Noise (dBA):	75				
Weight (Kg):	6,6				

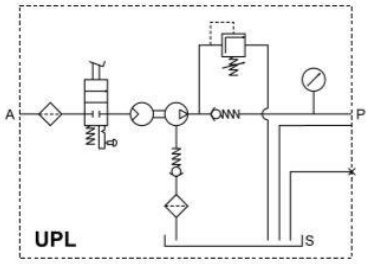

Size:

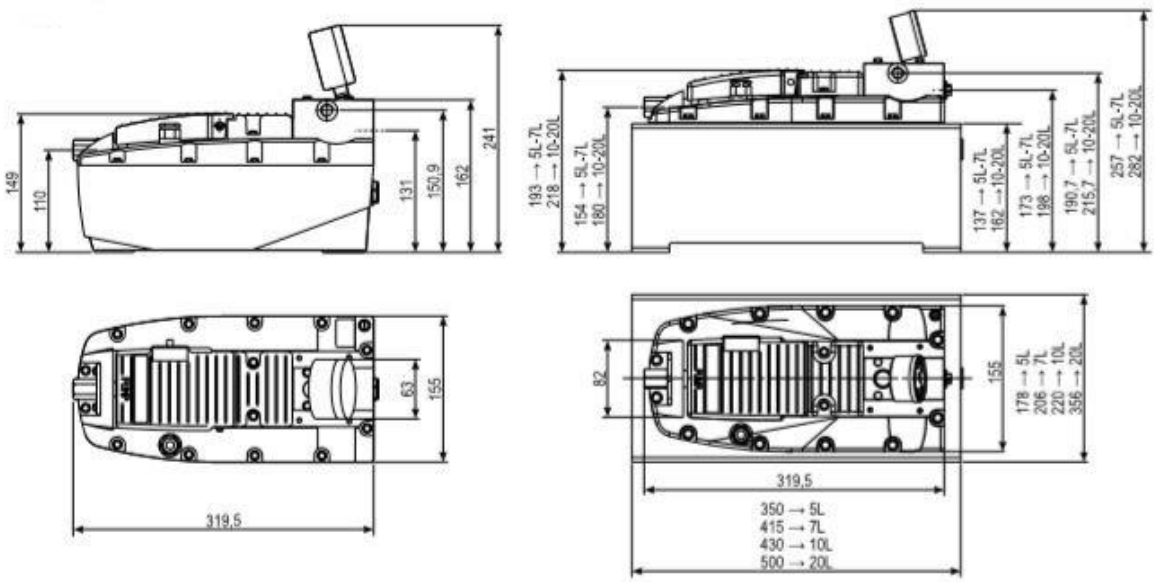

Series comparison:

Type	Max pressure (bar)	Cylinder	Tank (L)	Usable oil (L)	Oil flow unload (l/min)	Oil flow load (l/min)	Air range (bar)	Air consump (l/min)	Weight (kg)
UPL1002	1000	S.E.	2,4	2,1	0,8	0,14	2,8/10		6,8
UPL702	700	S.E.	2,4	2,1	1,1	0,15	2,8/10	50/440	6,5
UPL502	500	S.E.	2,4	2,1	2,1	0,2	2,8/10	110/320	6,8
UPL402	400	S.E.	2,4	2,1	2,5	0,25	2,8/10		6,7
UPL252	250	S.E.	2,4	2,1	2,6	0,7	2,8/10	180/390	6,7

To order:

- P/N 915320090 UPL1002 1000BAR BELL
- P/N 915220010 UPL702 700BAR BELL
- P/N 915220020 UPL502 500BAR BELL
- P/N 915200xxx UPL402 400BAR BELL
- P/N 915220110 UPL252 250BAR BELL

Accessories:

- Oversized tanks
- Fixing plates
- Fittings
- Hose Flex
- In-line hand valve

Spare parts:

- SEAL KIT UPL

UPHC

Air-hydraulic pump, independent and simultaneous hydraulic locks, single acting, Cetop3, manual / pneumatic drive, oil flow 0.7 l / min (250bar) - 0.25 l / min (400bar)

Series: UP

Product line: Industrial tools, clamping systems, actuators, complex hydraulic systems, automations

- **Two-position pedal (advance / hold) lockable in the forward position**
- **Single-acting cylinder compatibility (double-acting cylinders with optional in-line valve)**
- **Modular central control system**
- **Mechanical or pneumatic modular valve blocks up to 5 simultaneous and independent uses**
- **Compact and sturdy construction for heavy duty and long lifeFacile manutenzione**
- **No air lubricated required**
- **It works through the normal pneumatic network**
- **Versatile use in both vertical and horizontal positions**
- **Vent screw on the lid for tank ventilation during use**
- **Relief safety valve on the lid**
- **Maximum oil pressure valve adjustable from the outside to protect the circuit components**
- **Removable pyrex porthole level indicator for maximum easy refill**
- **Slots on the base support for easy installation onto the application**
- **Lightweight**
- **Low noise (75dBa)**
- **Various tank capacities (2.4 - 5 - 10 - 20) L for small and large cylinders**

Technical features:

Max working pressure (bar):	250	400
Cylinder compatibility:	Single acting Double acting through in-line hand valve (optional)	
Tank capacity (L):	2,4 – 5 – 7 – 10	
Usable oil (L):	2,1 – 4,65 – 6,9 – 9,5	
Max flow rate at nominal pressure (l/min):	0,7	0,25
Oil flow without load (l/min):	2,6	2,5
Oil flow with load (l/min):	0,7	0,25
Oil port:	3/8”NPTF (G3/8” – G1/4”)	
Air port:	G1/4”	
Valve function:	Advance/Hold	
Valve operation:	Automatic/Manual	
Modular valve operation:	Release	
Modular valve drive:	Manual/Pneumatic	
Energy source:	Air	
Pneumatic range (bar):	2,8/8,3 (10 max)	
Average air consumption (l/min):	390	440
Noise (dBA):	75	
Weight (Kg):	10	

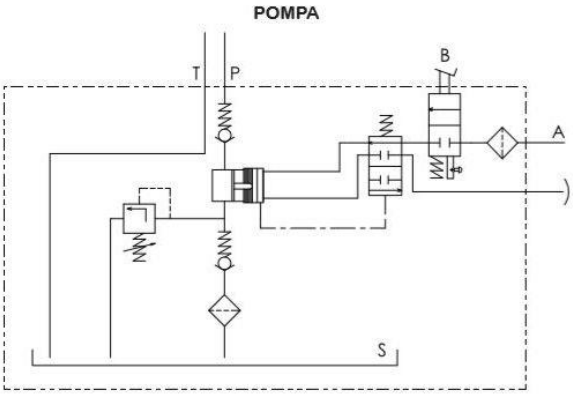

Size:

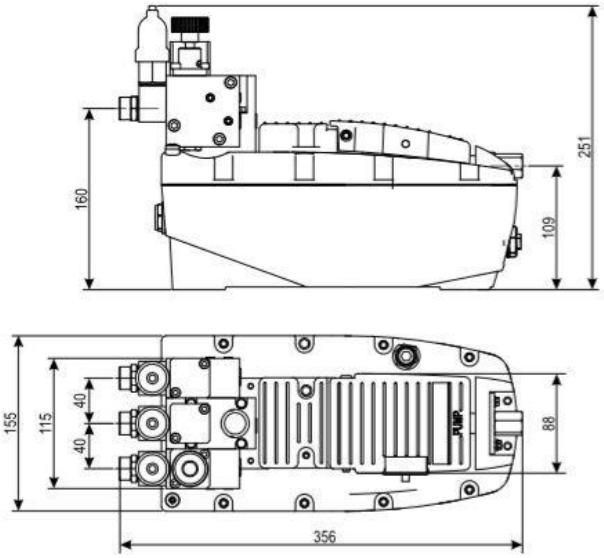

Series comparison:

Type	Max pressure (bar)	Cylinder	Tank (L)	Usable oil (L)	Oil flow unload (l/min)	Oil flow load (l/min)	Air range (bar)	Air consump (l/min)	Weight (kg)
UPHC252	250	S.E.	2,4	2,1	0,7	2,5	2,8/10	390	10
UPHC402	400	S.E.	2,4	2,1	0,25	2,5	2,8/10	440	10
UPHC410	420	S.E.	10	9,6	0,25	2,5	2,8/10		22,8

To order:

- P/N 915260020 UPHC 252 1M 250BAR BELL
- P/N 915260010 UPHC 252 1P 250BAR BELL
- P/N 915260030 UPHC 402 4P 320BAR BELL
- P/N 915360020 UPHC 410 4M 420BAR BELL
- P/N 830150610 MANUAL VALVE KIT
- P/N 830150600 PNEUMATIC VALVE KIT
- P/N 830150620 PRESSURE SWITCH KIT

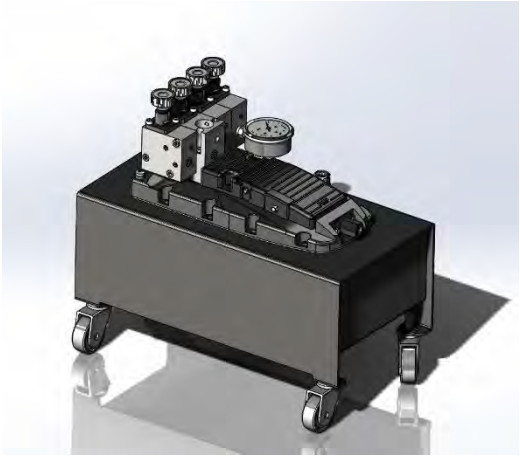

Accessori:

- Oversize tank
- Fixing plates
- Fittings
- Hose Flex
- Level switch
- In-line hand valve for double-acting cylinders

Ricambi:

- SEAL KIT UPHC

Ultra AirPump

UMP

Air hydraulic pump, double piston in line, double actuation with pedal control and lever distributor valve, for single and double effect, extremely robust and efficient, oil flow 0.29 (l / min) at 250bar

Series: UP

Product line: Industrial tools, large plants, mining use, simultaneous actuators, clamping

- **Foot operated 3 positions (advance / hold / return) and lever distributor valve (4/3)**
- **Double in line piston**
- **Large oil flow rates (4.9 l / min) and high pressures (up to 700bar)**
- **Ergonomic handle for easy handling and transport**
- **Extremely sturdy (main parts in treated steel)**
- **Standard 0-1000bar Ø63 pressure gauge**
- **Standard air reducer-filter-lubricator**
- **Single and double acting cylinder compatibility**
- **Simultaneous operation of two actuators alternately**
- **Compact and sturdy construction for heavy duty and long durability**
- **Easy maintenance**
- **It works through the normal pneumatic network**
- **Versatile use in both vertical and horizontal positions**
- **Relief safety valve on the lid**
- **Removable pyrex porthole level indicator for maximum easy refill**
- **Lightweight**
- **Low noise (75dBa)**
- **Oil tank in steel (capacity 5 L)**

Technical features:

Max working pressure (bar):	700
Cylinder compatibility:	Single/Double acting
Tank capacity (L):	5
Usable oil (L):	4,6
Max flow rate at nominal pressure (l/min):	0,29 (250bar)
Oil flow without load (l/min):	4,9
Oil flow with load (l/min):	0,29 (250bar)
Oil port:	3/8”NPTF (G3/8” – G1/4”)
Air port:	G1/4”
Valve function:	Advance/Hold/Release/Exchange
Energy source:	Air
Pneumatic range (bar):	2,8/8,3 (10 max)
Average air consumption (l/min):	
Noise (dBA):	75
Weight (Kg):	18,8

Series comparison:

Type	Max pressure (bar)	Cylinder	Tank (L)	Usable oil (L)	Oil flow unload (l/min)	Oil flow load (l/min)	Air range (bar)	Air consump (l/min)	Weight (kg)
UMP705	700	SE / DE	5	4,6	0,29(250bar)	4,9	2,8/10max		18,8
UPF705	700	SE	5	4,6	0,15(700bar)	1,1	2,8/10max	400	6,5
UPM705	700	DE	5	4,6	0,15(700bar)	1,1	2,8/10max	400	7,5

To order:

- P/N 915370020 UMP705 700BAR 3/8NPT BELL

Ultra AirPump

UPM

Air hydraulic pump, double acting, CETOP 3 connection, with distributor valve 4/3, oil flow (l / min) 0,8 / 0,14 (1000bar) - 1,1 / 0,15 (l / min) a (700bar)) - 2.1 / 0.2 (500bar) - 2.5 / 0.25 (400bar) - 2.6 / 0.7 (250bar)

Series: UP

Product line: Industrial tools, clamping systems, automations, lifting systems

- **Two-position pedal (forward / hold) lockable in the forward position**
- **CETOP 3 universal connection**
- **Hand valve 4/3 1000bar in steel installed**
- **Double-acting cylinder compatibility (single-acting allowed)**
- **Compact and sturdy construction for heavy duty and long durability**
- **Easy maintenance**
- **No air lubricated required**
- **It works through the normal pneumatic network**
- **Versatile use in both vertical and horizontal positions**
- **Vent screw on the lid for tank ventilation during use**
- **Relief safety valve on the lid**
- **Maximum oil pressure valve adjustable from the outside to protect the circuit components**
- **Removable pyrex porthole level indicator for maximum easy refill**
- **Slots on the base support for easy installation onto the application**
- **Lightweight**
- **Low noise (75dBa)**
- **Various tank capacities (2.4 - 5 - 10 - 20) L for small and large cylinders**

Technical features:

Max working pressure (bar):	250	400	500	700	1000
Cylinder compatibility:	Single acting Double acting through in-line hand valve (optional)				
Tank capacity (L):	2,4 – 5 – 7 – 10 – 12 – 20				
Usable oil (L):	2,1 – 4,65 – 6,9 – 9,5 – 11,1 – 19,4				
Max flow rate at nominal pressure (l/min):	0,7	0,25	0,2	0,15	0,14
Oil flow without load (l/min):	2,6	2,5	2,1	1,1	0,8
Oil flow with load (l/min):	0,7	0,25	0,2	0,15	0,14
Oil port:	3/8”NPTF (G3/8” – G1/4”)				
Air port:	G1/4”				
Valve function:	Advance/Hold/Hand valve				
Valve operation:	Automatic/Manual				
Energy source:	Air				
Pneumatic range (bar):	2,8/8,3 (10 max)				
Average air consumption (l/min):	390		320	400	400
Noise (dBA):	75				
Weight (Kg):	7,5				

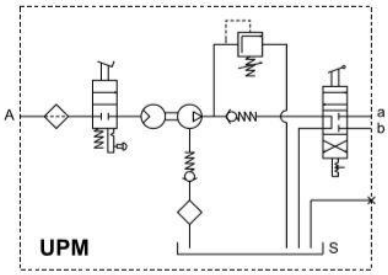

Size:

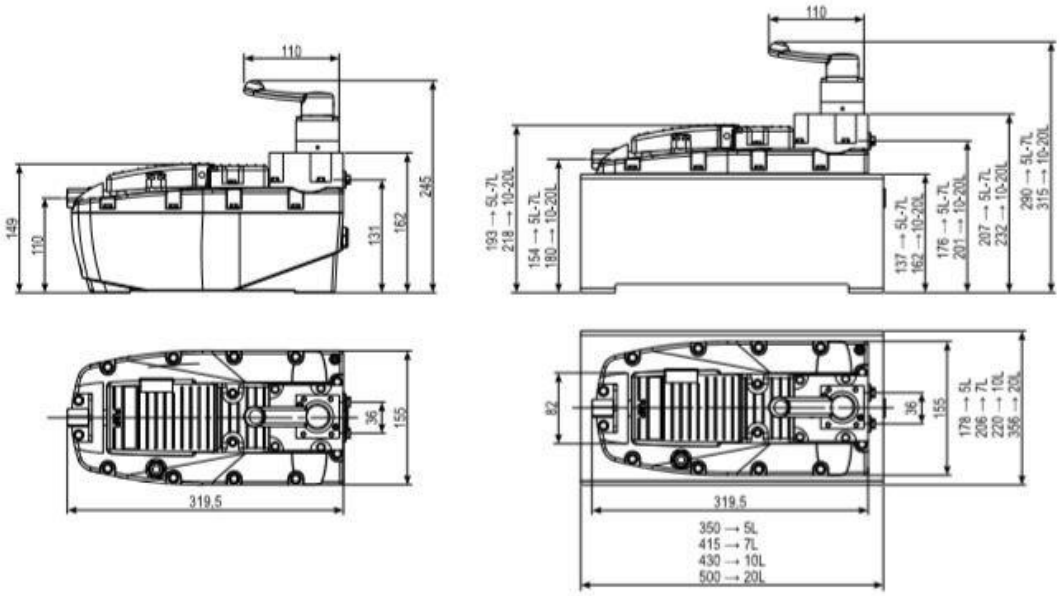

Series comparison:

Type	Max pressure (bar)	Cylinder	Tank (L)	Usable oil (L)	Oil flow unload (l/min)	Oil flow load (l/min)	Air range (bar)	Air consump (l/min)	Weight (kg)
UPM1002	1000	D.E.	2,4	2,1	0,8	0,14	2,8/10		7,5
UPM702	700	D.E.	2,4	2,1	1,1	0,15	2,8/10	50/440	7,5
UPM502	500	D.E.	2,4	2,1	2,1	0,2	2,8/10	110/320	7,5
UPM402	400	D.E.	2,4	2,1	2,5	0,25	2,8/10		7,5
UPM252	250	D.E.	2,4	2,1	2,6	0,7	2,8/10	180/390	7,5
UPM-2V1002	1000	D.E.	2,4	2,1	0,8	0,14	2,8/10	400	7,5
UPM-2V702	700	D.E.	2,4	2,1	1,1	0,15	2,8/10		7,5
UPM-2V502	500	D.E.	2,4	2,1	2,1	0,2	2,8/10		7,5
UPM-2V402	400	D.E.	2,4	2,1	2,5	0,25	2,8/10		7,5
UPM-2V252	250	D.E.	2,4	2,1	2,6	0,7	2,8/10		7,5
UPMD710	700	D.E.	10	9,5	1,1	0,15	4/10	780	23,7
UPMD725-RC	700	D.E.	29	25	1,1	0,15	4/10	780	50

To order:

- P/N 915230420 UPM1002 1000BAR BELL
- P/N 915230100 UPM702 700BAR BELL
- P/N 915230110 UPM502 500BAR BELL
- P/N 915230040 UPM252 250BAR BELL

Accessories:

- Oversize tank
- Fixing plates
- Hose flex
- Pressure gauge kit

Spare parts: SEAL KIT UPM

UPM-2V

Pompa pneumoidraulica, doppia valvola distributore 4/3 con 4 uscite idrauliche, azionamento manuale, doppio effetto, attacco CETOP 3, manometro e valvole riduttrici, portata olio (l/min) 0,8/0,14 (1000bar) – 1,1/0,15 (l/min) a(700bar) – 2,1/0,2 (500bar) – 2,5/0,25 (400bar) – 2,6/0,7 (250bar)

Serie: UP

Linea prodotto: Utensili industriali, sistemi di bloccaggio, automazioni, sistemi di sollevamento

- **Two-position pedal (forward / hold) lockable in the forward position**
- **CETOP 3 universal connection**
- **Double 4/3 steel hand valve assembled on a 4-way control driving block**
- **Control valves on each distributor**
- **Ø63mm pressure gauge - 0-1000bar scale installed**
- **Double-acting cylinder compatibility (single-acting allowed)**
- **Compact and sturdy construction for heavy duty and long durability**
- **Easy maintenance**
- **No air lubricated required**
- **It works through the normal pneumatic network**
- **Versatile use in both vertical and horizontal positions**
- **Vent screw on the lid for tank ventilation during use**
- **Relief safety valve on the lid**
- **Maximum oil pressure valve adjustable from the outside to protect the circuit components**
- **Removable pyrex porthole level indicator for maximum easy refill**
- **Slots on the base support for easy installation onto the application**
- **Lightweight**
- **Low noise (75dBa)**
- **Various tank capacities (2.4 - 5 - 10 - 20) L for small and large cylinders**

Technical features:

Max working pressure (bar):	250	400	500	700	1000
Cylinder compatibility:	Double acting/Double hand valve				
Tank capacity (L):	2,4 – 5 – 7 – 10 – 12 – 20				
Usable oil (L):	2,1 – 4,65 – 6,9 – 9,5 – 11,1 – 19,4				
Max flow rate at nominal pressure (l/min):	0,7	0,25	0,2	0,15	0,14
Oil flow without load (l/min):	2,6	2,5	2,1	1,1	0,8
Oil flow with load (l/min):	0,7	0,25	0,2	0,15	0,14
Oil port:	3/8”NPTF (G3/8” – G1/4”)				
Air port:	G1/4”				
Valve function:	Advance/Hold/Hand valves				
Valve operation:	Automatic/Manual				
Energy source:	Air				
Pneumatic range (bar):	2,8/8,3 (10 max)				
Average air consumption (l/min):	390		320	400	400
Noise (dBA):	75				
Weight (Kg):	7,5				

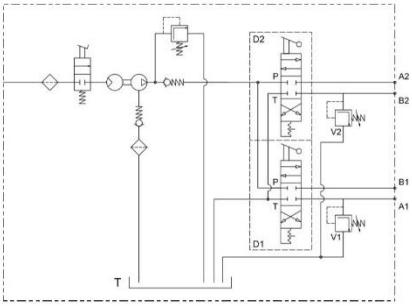

Size:

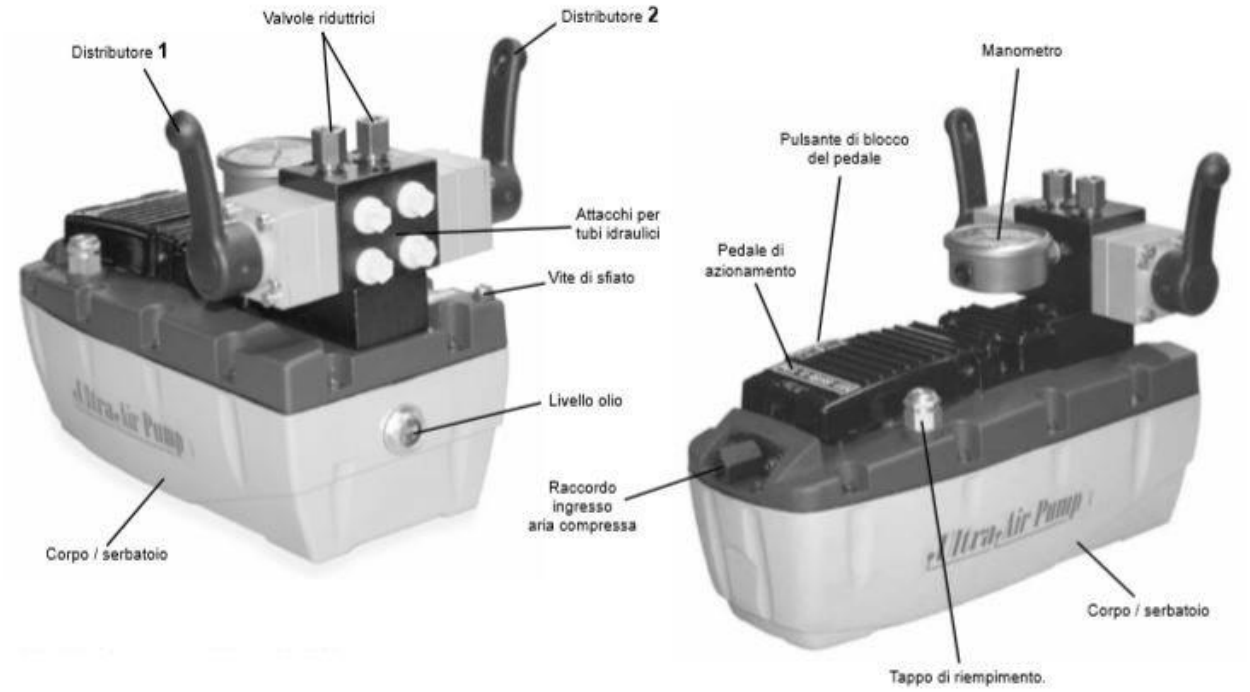

Series comparison:

Type	Max pressure (bar)	Cylinder	Tank (L)	Usable oil (L)	Oil flow unload (l/min)	Oil flow load (l/min)	Air range (bar)	Air consump (l/min)	Weight (kg)
UPM1002	1000	D.E.	2,4	2,1	0,8	0,14	2,8/10		7,5
UPM702	700	D.E.	2,4	2,1	1,1	0,15	2,8/10	50/440	7,5
UPM502	500	D.E.	2,4	2,1	2,1	0,2	2,8/10	110/320	7,5
UPM402	400	D.E.	2,4	2,1	2,5	0,25	2,8/10		7,5
UPM252	250	D.E.	2,4	2,1	2,6	0,7	2,8/10	180/390	7,5
UPM-2V1002	1000	D.E.	2,4	2,1	0,8	0,14	2,8/10	400	7,5
UPM-2V702	700	D.E.	2,4	2,1	1,1	0,15	2,8/10		7,5
UPM-2V502	500	D.E.	2,4	2,1	2,1	0,2	2,8/10		7,5
UPM-2V402	400	D.E.	2,4	2,1	2,5	0,25	2,8/10		7,5
UPM-2V252	250	D.E.	2,4	2,1	2,6	0,7	2,8/10		7,5
UPMD710	700	D.E.	10	9,5	1,1	0,15	4/10	780	23,7
UPMD725-RC	700	D.E.	29	25	1,1	0,15	4/10	780	50

To order:

- P/N 91523042x UPM1002-2V 1000BAR BELL
- P/N 91523010x UPM702-2V 700BAR BELL
- P/N 91523011x UPM502-2V 500BAR BELL
- P/N 915230450 UPM252-2V 250BAR BELL

Accessories:

- Oversize tank
- Fixing plates
- Hose flex

Spare parts:

SEAL KIT UPM

Ultra AirPump

UPMD710

Air hydraulic pump, double pneumatic motor, double acting, foot operated with lock-up function, lever distributor valve (4/3), tank capacity 10L, oil flow 0.26 l / min at 700bar (2nd stage)

Series: UP

Product line: Industrial tools, large systems, lifting, clamping systems, large cylinders, automationi

- **Two-position pedal (advance / hold) lockable on automatic systems**
- **CETOP 3 standard connection**
- **Hand valve 4/3 700bar in treated aluminum installed on Cetop**
- **Double-acting cylinder compatibility (single-acting cylinder allowed)**
- **Tilting handle for easy grip during transport**
- **Secondary outlport for oil return to the tank**
- **Double air motor for large oil flows (l/min) and high working pressures (700 bar)**
- **Compact and sturdy construction for heavy duty and long durability**
- **Easy Maintenance**
- **No air lubricated required**
- **It works through the normal pneumatic network**
- **Filling oil cap with ventilation during use**
- **Internal oil pressure relief valve to protect the circuit parts**
- **Removable pyrex oil level indicator for maximum easy refill**
- **Slots on the base support for easy fix on the application**
- **Lightweight**
- **Double silencer for maximum comfort and safety during use (85dBa)**
- **10 L tank capacity for small and large cylinders**
- **Parking feet or pivoting wheels (optional)**

Technical features:

Max working pressure (bar):	700
Cylinder compatibility:	Double acting
Oil tank capacity (L):	10
Usabel oil (L):	9
Max oil flow nominal (l/min):	0,26 (700bar)
Oil flow without load (l/min):	8,5
Oil flow with load (l/min):	0,26 (700bar)
Oil port:	3/8”NPTF - G1/4”
Air port:	G3/8”
Valve operation:	Advance/Hold/Hand valve
Power source:	Air
Pneumatic range (bar):	4-8 (10 max)
Average air consumption (l/min):	780
Noise (dBA):	85
Weight (Kg):	23,7

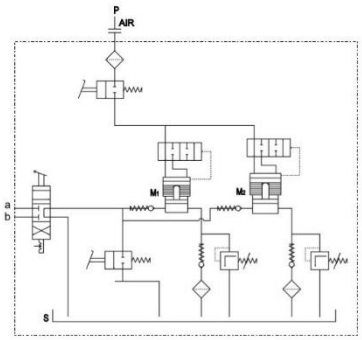

Size:

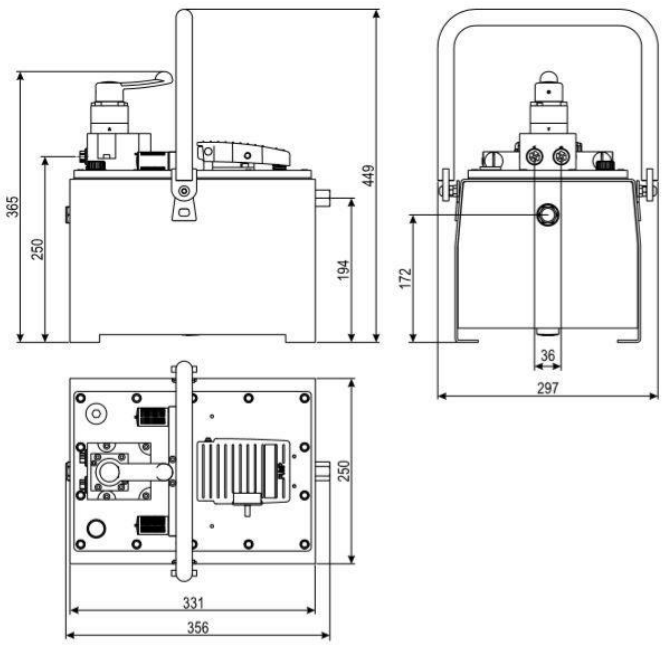

Series comparison:

Type	Max pressure (bar)	Cylinder	Tank (L)	Usable oil (L)	Oil flow unload (l/min)	Oil flow load (l/min)	Air range (bar)	Air consump (l/min)	Weight (kg)
UPFD710	700	S.E.	10	9	8,5	0,26 (700bar)	4-10	780	23,6
UPFD725	700	S.E.	30	25	8,5	0,26 (700bar)	4-10	780	48,5
UPDPF705-16/5	700	S.E.	5	4,6	4,9	0,29 (250bar)	4-10		13,9
UPMD710	700	D.E.	10	9	8,5	0,26 (700bar)	4-10	780	23,6
UPMD725-RC	700	D.E.	30	25	8,5	0,26 (700bar)	4-10	780	48,5
UPRDSE710	700	S.E.	10	9	8,5	0,26 (700bar)	4-10	780	24,7

To order:

- P/N 915330470 UPMD710 700BAR BELL
- P/N 915330520 UPMD725 700BAR BELL

Accessories:

- Fittings
- Hose Flex
- Parking feet
- Pivoting wheels

Spare parts:

- SEAL KIT UPMD

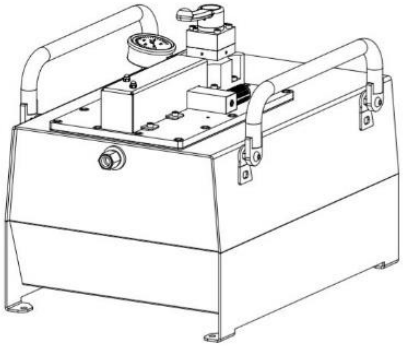

Ultra AirPump

UPMD725-RC

Air hydraulic pump, double pneumatic motor, double acting, pneumatic RC drive, lever distributor valve (4/3), pressure gauge, tank capacity 10L, oil flow 0.26 l / min at 700bar (2nd stage)

Series: UP

Product line: Industrial tools, large systems, lifting, clamping systems, large cylinders, automations

- **Pneumatic RC operation (advance)**
- **CETOP 3 standard connection**
- **Hand valve 4/3 700bar in treated aluminum installed on Cetop**
- **Ø63mm/0-1000bar pressure gauge standard**
- **Double acting cylinder compatibility (single acting cylinder allowed))**
- **Tilting handle for easy grip during transport**
- **Secondary outlport for oil return to the tank**
- **Double air motor for large oil flows (l/min) and high working pressures (700 bar)**
- **Compact and sturdy construction for heavy duty and long durability**
- **Easy Maintenance**
- **No air lubricated required**
- **It works through the normal pneumatic network**
- **Filling oil cap with ventilation during use**
- **Internal oil pressure relief valve to protect the circuit parts**
- **Removable pyrex oil level indicator for maximum easy refill**
- **Slots on the base support for easy fix on the application**
- **Lightweight**
- **Double silencer for maximum comfort and safety during use (85dBa)**
- **25 L tank capacity for large cylinders**
- **Parking feet or pivoting wheels (optional)**

Technical features:

Max working pressure (bar):	700	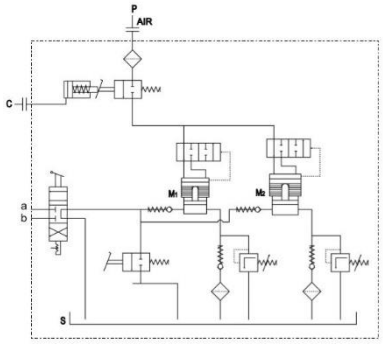
Cylinder compatibility:	Double acting (single acting allowed)	
Oil tank capacity (L):	29	
Usabel oil (L):	25	
Max oil flow nominal (l/min):	0,26 (700bar)	
Oil flow without load (l/min):	8,5	
Oil flow with load (l/min):	0,265	
Oil port:	3/8”NPTF - G1/4”	
Air port:	G3/8”	
Valve operation:	Advance/Hold/Release	
Power source:	Aria	
Pneumatic range (bar):	4-8 (10 max)	
Average air consumption (l/min):	780	
Noise (dBA):	85	
Weight (Kg):	48,5	

Size:

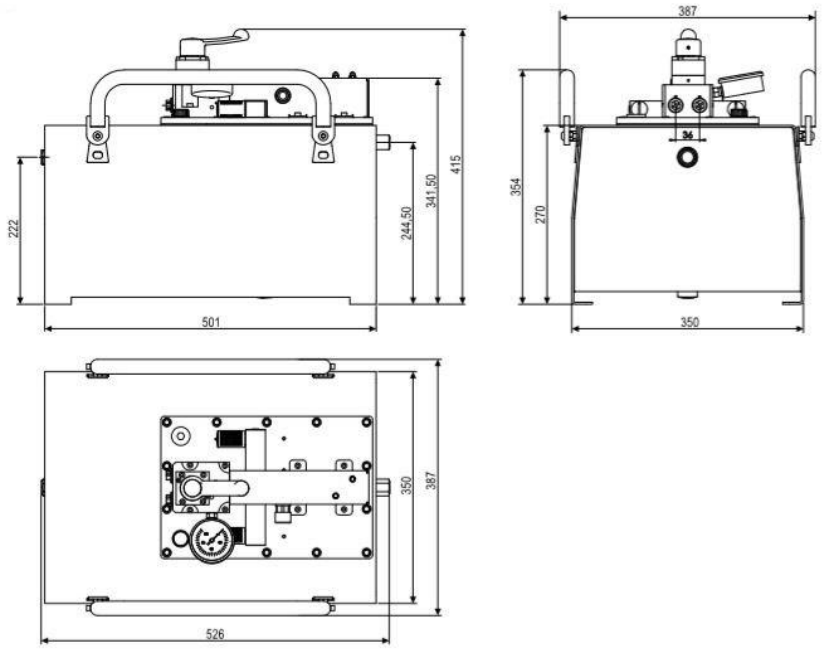

Series comparison:

Type	Max pressure (bar)	Cylinder	Tank (L)	Usable oil (L)	Oil flow unload (l/min)	Oil flow load (l/min)	Air range (bar)	Air consump (l/min)	Weight (kg)
UPFD710	700	S.E.	10	9	8,5	0,26 (700bar)	4-10	780	23,6
UPFD725	700	S.E.	30	25	8,5	0,26 (700bar)	4-10	780	48,5
UPDPF705-16/5	700	S.E.	5	4,6	4,9	0,29 (250bar)	4-10		13,9
UPMD710	700	D.E.	10	9	8,5	0,26 (700bar)	4-10	780	23,6
UPMD725-RC	700	D.E.	30	25	8,5	0,26 (700bar)	4-10	780	48,5
UPRDSE710	700	S.E.	10	9	8,5	0,26 (700bar)	4-10	780	24,7

To order:

- P/N 915330530 UPMD-RC725 580BAR BELL + GAUGE

Accessories:

- Fittings
- Hose Flex
- Parking feet
- Pivoting wheels

Spare parts:

- SEAL KIT UPMD

Ultra AirPump

UPR

Air-hydraulic pump, remote controlled operation, ergonomic push-button panel, pneumatic connection length 3m, oil flow (l / min) 0,8 / 0,14 (1000bar) - 1,1 / 0,15 (l / min) a (700bar)) - 2.1 / 0.2 (500bar) - 2.5 / 0.25 (400bar) - 2.6 / 0.7 (250bar)

Series: UP

Product line: Industrial tools, bodywork, car repairers, lifting systems

- **Pneumatic piston drive with brass pins**
- **Pneumatic operation through a 2 or 3 button remote control (safety/emergency)**
- **Ergonomic handle for easy transport**
- **Pneumatic connection to the push-button panel standard length 3m (can be supplied to measure)**
- **Protective case**
- **Single acting cylinder compatibility**
- **Compact and sturdy construction for heavy duty long durability**
- **No air lubricated required**
- **It works through the normal pneumatic network**
- **Versatile use in both horizontal and vertical positions**
- **Venting screw on the cover to avoid any air overpressure inside the oil tank during the operations**
- **Preset safety valve on the cover to protect the pump**
- **Maximum oil pressure valve adjustable from the outside to protect the hydraulic circuit parts**
- **Removable pyrex oil level indicator for easy refill and releaf valve adjustments**
- **Slots on the base support for easy installation fix on the system**
- **Lightweight**
- **Low noise (75dBa)**
- **Oversize oil tanks available (2,4 – 5 – 10 – 20) L for small and bigger cylnders**

Technical features:

Max working pressure (bar):	250	400	500	700	1000
Cylinder compatibility:	Single effect Double effect through hand valve (optional)				
Oil tank capacity (L):	2,4 – 5 – 7 – 10 – 12 – 20				
Usabel oil (L):	2,1 – 4,65 – 6,9 – 9,5 – 11,1 – 19,4				
Max oil flow nominal (l/min):	0,7	0,25	0,2	0,15	0,14
Oil flow without load (l/min):	2,6	2,5	2,1	1,1	0,8
Oil flow with load (l/min):	0,7	0,25	0,2	0,15	0,14
Oil port:	3/8”NPTF (G3/8” – G1/4”)				
Air port:	G1/4”				
Valve operation:	Advance/Hold/Release				
Power source:	Manuale				
Pneumatic range (bar):	Aria				
Average air consumption (l/min):	2,8/8,3 (10 max)				
Noise (dBA):	390		320	400	400
Weight (Kg):	75				
Cylinder compatibility:	7,8				

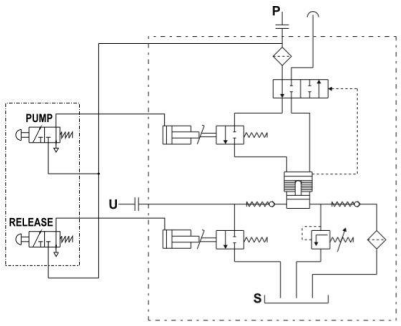

Size:

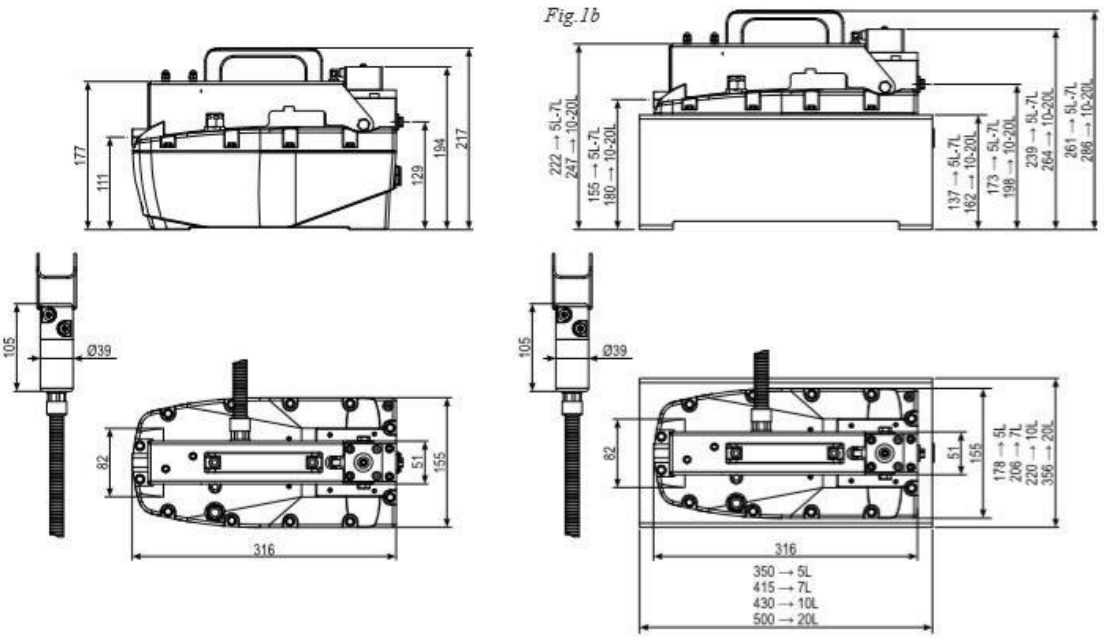

Series comparison:

Type	Max pressure (bar)	Cylinder	Tank (L)	Usable oil (L)	Oil flow unload (l/min)	Oil flow load (l/min)	Air range (bar)	Air consump (l/min)	Weight (kg)
UPR1002	1000	S.E.	2,4	2,1	0,8	0,14	2,8/10		7,8
UPR702	700	S.E.	2,4	2,1	1,1	0,15	2,8/10	50/440	7,8
UPR502	500	S.E.	2,4	2,1	2,1	0,2	2,8/10	110/320	7,8
UPR402	400	S.E.	2,4	2,1	2,5	0,25	2,8/10		7,8
UPR252	250	S.E.	2,4	2,1	2,6	0,7	2,8/10	180/390	7,8

To order:

- P/N 915250440 UPR1002 1000BAR BELL
- P/N 915250190 UPR702 700BAR BELL
- P/N 915250220 UPR502 500BAR BELL
- P/N 91520098X UPR402 400BAR BELL
- P/N 915250010 UPR252 250BAR BELL

Accessories:

- Oversize oil tanks
- Fixing plates
- Fitting
- Hose flex
- 3 button remote control (advance/release/safety)
- In line hand valve

Spare parts:

- SEAL KIT UPR

Ultra AirPump

UPRD

Air-hydraulic pump, remote control operation, double acting, ergonomic 3-button push-button panel, pneumatic connection length 3m, oil flow 0.14 (l / min) at 1.000bar

---

Series: UP

Product line: Industrial tools, bodywork, car repairers, lifting systems

- **Pneumatic piston drive with brass pins**
- **Pneumatic piston system for double acting cylinders**
- **Pneumatic operation through a 2 or 3 button remote control (safety/emergency)**
- **Ergonomic handle for easy transport**
- **Pneumatic connection to the push-button panel standard length 3m (can be supplied to measure)**
- **Protective case**
- **Double acting cylinder compatibility**
- **Compact and sturdy construction for heavy duty long durability**
- **No air lubricated required**
- **It works through the normal pneumatic network**
- **Versatile use in both horizontal and vertical positions**
- **Venting screw on the cover to avoid any air overpressure inside the oil tank during the operations**
- **Preset safety valve on the cover to protect the pump**
- **Maximum oil pressure valve adjustable from the outside to protect the hydraulic circuit parts**
- **Removable pyrex oil level indicator for easy refill and releaf valve adjustments**
- **Slots on the base support for easy installation fix on the system**
- **Lightweight**
- **Low noise (75dBa)**
- **Oversize oil tanks available (2,4 – 5 – 10 – 20) L for small and bigger cylnders**

Technical features:

Max working pressure (bar):	250	400	500	700	1000
Cylinder compatibility:	Double acting				
Oil tank capacity (L):	2,4 – 5 – 7 – 10 – 12 – 20				
Usabel oil (L):	2,1 – 4,65 – 6,9 – 9,5 – 11,1 – 19,4				
Max oil flow nominal (l/min):	0,7	0,25	0,2	0,15	0,14
Oil flow without load (l/min):	2,6	2,5	2,1	1,1	0,8
Oil flow with load (l/min):	0,7	0,25	0,2	0,15	0,14
Oil port:	3/8”NPTF (G3/8” – G1/4”)				
Air port:	G1/4”				
Valve operation:	Advance/Hold/Release				
Valve function:	Manual/Pneumatic				
Power source:	Air				
Pneumatic range (bar):	2,8/8,3 (10 max)				
Average air consumption (l/min):	390		320	400	400
Noise (dBA):	75				
Weight (Kg):	9,8				

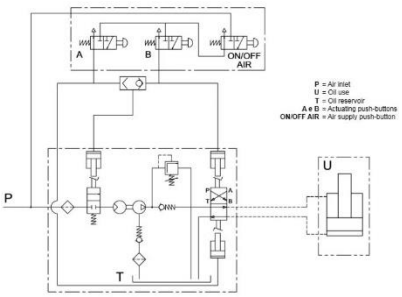

Size:

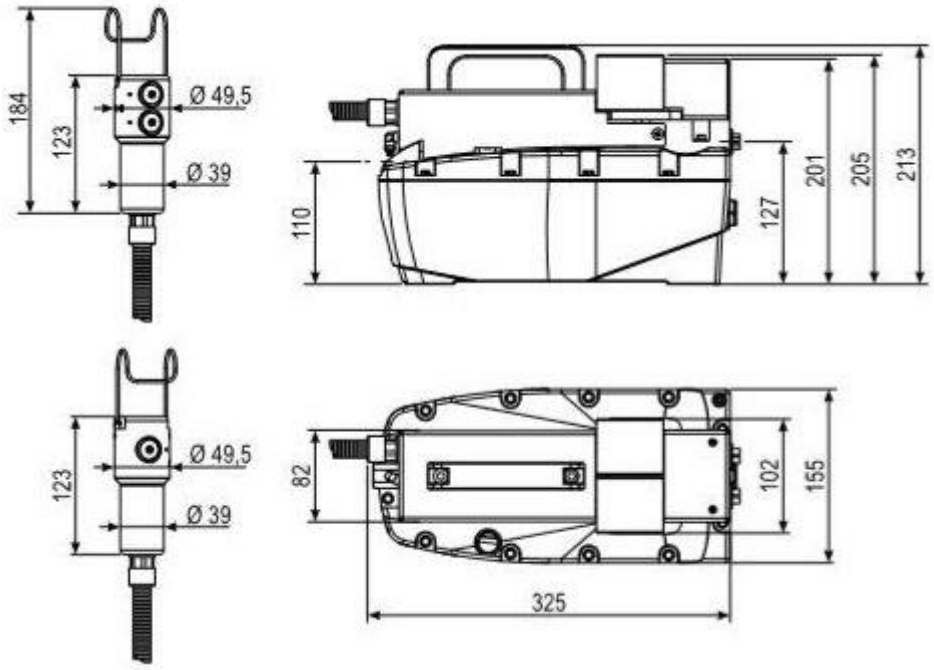

Series comparison:

Type	Max pressure (bar)	Cylinder	Tank (L)	Usable oil (L)	Oil flow unload (l/min)	Oil flow load (l/min)	Air range (bar)	Air consump (l/min)	Weight (kg)
UPRD1002	1000	D.E.	2,4	2,1	0,8	0,14	2,8/10		9,8
UPRD702	700	D.E.	2,4	2,1	1,1	0,15	2,8/10	50/440	9,8
UPRD502	500	D.E.	2,4	2,1	2,1	0,2	2,8/10	110/320	9,8
UPRD402	400	D.E.	2,4	2,1	2,5	0,25	2,8/10		9,8
UPRD252	250	D.E.	2,4	2,1	2,6	0,7	2,8/10	180/390	9,8

To order:

- P/N 915250470 UPRD1002 1000BAR BELL
- P/N 915250410 UPRD702 700BAR BELL
- P/N 915250460 UPRD502 500BAR BELL
- P/N 91520098X UPRD402 400BAR BELL
- P/N 915250450 UPRD252 250BAR BELL

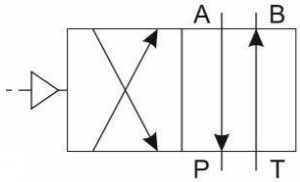

Hydraulic directional valve 4/2 Cetop03 pneumatically operated

Accessories:

- Oversize oil tanks
- Fixing plates
- Fitting
- Hose flex
- 3 button remote control (advance/release/safety)
- In line hand valve

Spare parts:

- SEAL KIT UPRD

UltraAirPump

UPRDSE710

Air hydraulic pump, double pneumatic motor, single acting, remote pneumatic RC drive (advance / seal / return), 3 button pneumatic control, tank capacity 10L, oil flow 0.26 l / min at 700bar (2nd stage)

Series: UP

Product line: Industrial tools, large plants, lifting, clamping systems, large cylinders

- **Remote RC operation**
- **Pneumatic remote pendant (advance /hold /release)**
- **On/off safety button to prevent any type of accidental activation**
- **Tilting handle for easy grip during transport**
- **Single acting cylinder compatibility (double acting cylinder allowed)**
- **Secondary outlport for oil return to the tank**
- **Double air motor for large oil flows (l/min) and high working pressures (700 bar)**
- **Compact and sturdy construction for heavy duty and long durability**
- **Easy Maintenance**
- **No air lubricated required**
- **It works through the normal pneumatic network**
- **Filling oil cap with ventilation during use**
- **Internal oil pressure relief valve to protect the circuit parts**
- **Removable pyrex oil level indicator for maximum easy refill**
- **Slots on the base support for easy fix on the application**
- **Lightweight**
- **Double silencer for maximum comfort and safety during use (85dBa)**
- **10 L tank capacity for small and large cylinders**
- **Parking feet or pivoting wheels (optional)**

Technical features:

Max working pressure (bar):	700
Cylinder compatibility:	Single acting Double acting through in-line hand valve (optional)
Oil tank capacity (L):	10
Usable oil (L):	9
Max oil flow nominal (l/min):	0,26 (700bar)
Oil flow without load (l/min):	8,5
Oil flow with load (l/min):	0,265
Oil port:	3/8”NPTF - G1/4”
Air port:	G3/8”
Valve operation:	Advance/Hold/Release
Valve function:	Manual
Power source:	Air
Pneumatic range (bar):	4-8 (10 max)
Average air consumption (l/min):	780
Noise (dBA):	85
Weight (Kg):	25

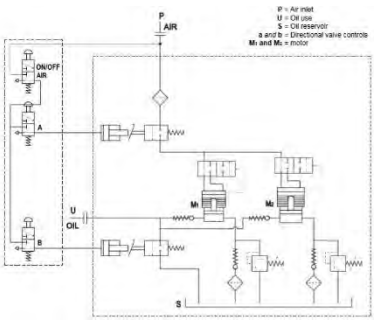

Size:

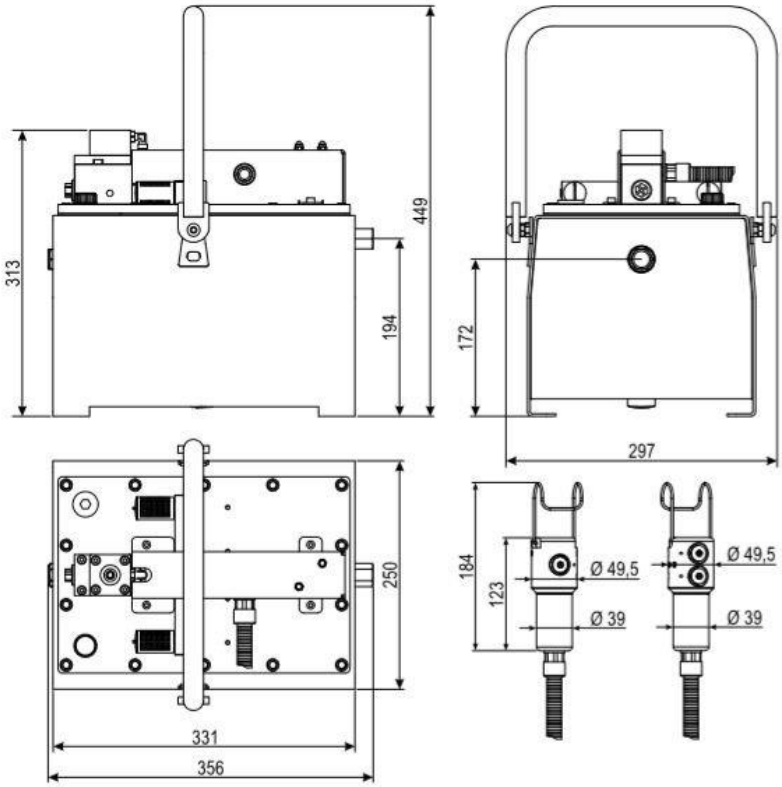

Series comparison:

Type	Max pressure (bar)	Cylinder	Tank (L)	Usable oil (L)	Oil flow unload (l/min)	Oil flow load (l/min)	Air range (bar)	Air consump (l/min)	Weight (kg)
UPFD710	700	S.E.	10	9	8,5	0,26 (700bar)	4-10	780	23,6
UPFD725	700	S.E.	30	25	8,5	0,26 (700bar)	4-10	780	48,5
UPDPF705-16/5	700	S.E.	5	4,6	4,9	0,29 (250bar)	4-10		13,9
UPMD710	700	D.E.	10	9	8,5	0,26 (700bar)	4-10	780	23,6
UPMD725-RC	700	D.E.	30	25	8,5	0,26 (700bar)	4-10	780	48,5
UPRDSE710	700	S.E.	10	9	8,5	0,26 (700bar)	4-10	780	24,7

To order:

- P/N 915350390 UPRDSE710 700BAR BELL

Accessories:

- Fittings
- Hose flex
- In-line hand valve
- Parking feet
- Pivoting wheels

Spare parts:

- SEAL KIT UPRD

Ultra AirPump

UPFD710

Air-hydraulic pump, double pneumatic motor, single-acting, pedal operated (advance / seal / return), tank capacity 10L, oil flow 0.26 l / min at 700bar (2nd stage)

Series: UP

Product line: Industrial tools, large plants, lifting, clamping systems, large cylinders

- **Pedal operation**
- **Unmistakable pedal design**
- **Tilting handle for easy grip on transport**
- **3-position pedal operation with spring return (advance, hold and release)**
- **Single acting cylinder compatibility (double acting cylinder allowed)**
- **Secondary outlport for oil return to the tank**
- **Double air motor for large oil flows (l/min) and high working pressures (700 bar)**
- **Compact and sturdy construction for heavy duty and long durability**
- **Easy Maintenance**
- **No air lubricated required**
- **It works through the normal pneumatic network**
- **Filling oil cap with ventilation during use**
- **Internal oil pressure relief valve to protect the circuit parts**
- **Removable pyrex oil level indicator for maximum easy refill**
- **Slots on the base support for easy fix on the application**
- **Lightweight**
- **Double silencer for maximum comfort and safety during use (85dBa)**
- **10 L tank capacity for small and large cylinders**
- **Parking feet or pivoting wheels (optional)**

Technical features:

Max working pressure (bar):	700
Cylinder compatibility:	Single acting Double acting through in-line hand valve (optional)
Oil tank capacity (L):	10
Usable oil (L):	9
Max oil flow nominal (l/min):	0,26 (700bar)
Oil flow without load (l/min):	8,5
Oil flow with load (l/min):	0,265
Oil port:	3/8”NPTF - G1/4”
Air port:	G3/8”
Valve operation:	Advance/Hold/Release
Valve function:	Manual
Power source:	Air
Pneumatic range (bar):	4-8 (10 max)
Average air consumption (l/min):	780
Noise (dBA):	85
Weight (Kg):	23,7

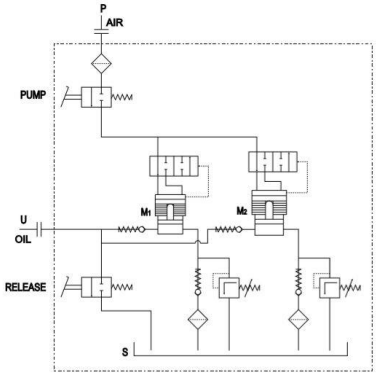

Size:

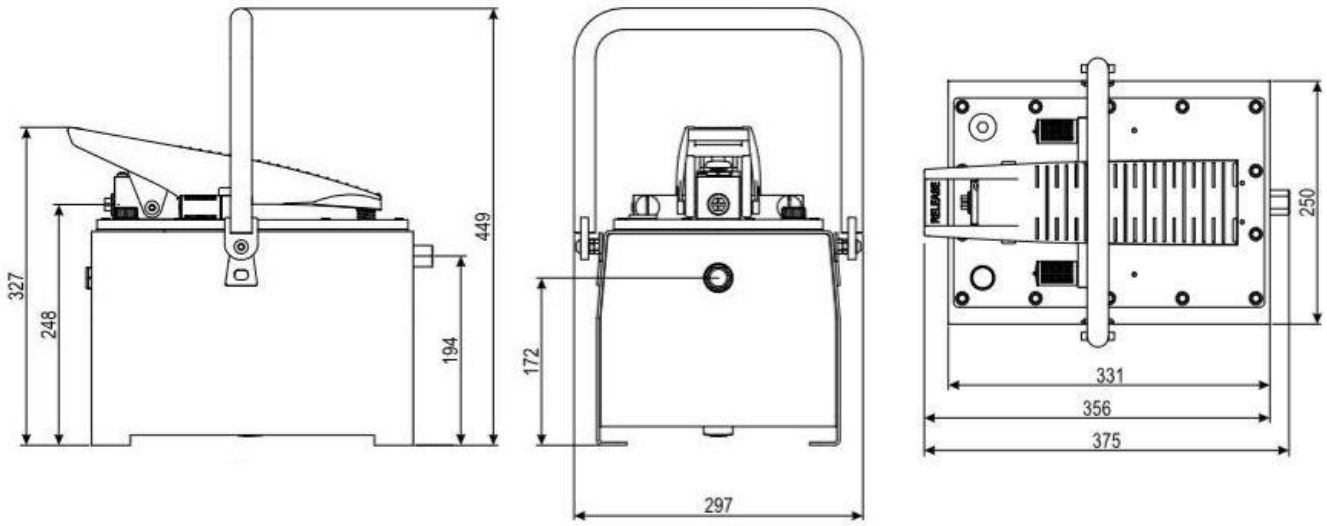

Series comparison:

Type	Max pressure (bar)	Cylinder	Tank (L)	Usable oil (L)	Oil flow unload (l/min)	Oil flow load (l/min)	Air range (bar)	Air consump (l/min)	Weight (kg)
UPFD710	700	S.E.	10	9	8,5	0,26 (700bar)	4-10	780	23,6
UPFD725	700	S.E.	30	25	8,5	0,26 (700bar)	4-10	780	48,5
UPDPF705-16/5	700	S.E.	5	4,6	4,9	0,29 (250bar)	4-10		13,9
UPMD710	700	D.E.	10	9	8,5	0,26 (700bar)	4-10	780	23,6
UPMD725-RC	700	D.E.	30	25	8,5	0,26 (700bar)	4-10	780	48,5
UPRDSE710	700	S.E.	10	9	8,5	0,26 (700bar)	4-10	780	24,7

To order:

- P/N 915300700 UPFD710 700BAR BELL
- P/N 915300740 UPFD725 700BAR BELL

Accessories:

- Fittings
- Hose flex
- In-line hand valve
- Parking feet
- Pivoting wheels

Spare parts:
SEAL KIT UPFD

Electro-hydraulic pumps (BDP - EDPH Series)

(introduction)

BELL BATTERY-POWERED ELECTRO-HYDRAULIC PUMPS IN THE DPD SERIES ARE POWERED BY LITHIUM-ION BATTERIES AND GUARANTEE A LONGER LIFE EVEN IN EXTREME WORKING CONDITIONS

HIGH PRESSURE HYDRAULIC PUMPS WIRELESS, THE MOST SUITABLE SOLUTION FOR OPERATIONS WHICH REQUIRE MAXIMUM EASE OF TRANSPORT, SPEED AND SAFETY

THE BEST FOR OUTDOOR APPLICATIONS WITHOUT THE POSSIBILITY OF EXTERNAL POWER SUPPLY, BUT ALSO INDOOR WHERE IT IS ESSENTIAL NOT TO HAVE INTEREST DURING OPERATIONS AND MAXIMUM HANDLING

ULTRA COMPACT AND ERGONOMIC DESIGN, WITH CARRYING HANDLE AND SHOULDER STRAP, SAFETY COVER, DRIVE BUTTON, LITHIUM BATTERY HOUSING SLOT, OIL FILL CAP AND LEVER RELEASE VALVE

All BELL products are designed and manufactured within BELL SRL in via F. De Pisis, 5 - 42124 Reggio Emilia (RE) - Italy, according to the Quality Standards that distinguish the MADE IN ITALY from the Rest of the World.

BDP700 – Battery Driven Pump

Battery operated hydraulic pump, single acting, push button operation, oil pressure min 20bar max 700bar, oil flow min 0.7 l / min max 0.06 l / min

---

Series: BDP

Product line: Industrial tools, bodywork, car repairers, lifting systems, clamping systems, punches, hydraulic cutters, bead breakers, shearing machines

- **Manual operation without cables and external power supply**
- **Powered by 4.0Ah lithium-ion battery for heavy duty and long life**
- **Extremely compact design with ergonomic handle and shoulder strap for maximum portability**
- **Push button operation (advance and hold)**
- **Activation button safety cover**
- **Single acting cylinder compatibility**
- **Easy maintenanceFunzionamento sia in orizzontale che in verticale per un impiego versatile**
- **Oil filler cap**
- **Internal max relief valve to protect the circuit components**
- **Lever release valve for oil return to the tank**
- **Extremely lightweight**
- **Low Noise (very silent!)**
- **Oil tank capacity 0,6L-1L**

Specifiche tecniche:

Max working pressure (bar):	20 - 700
Cylinder compatibility:	Single acting
Oil tank capacity (L):	0,6 – 1
Usable oil (L):	0,6 – 1
Max oil flow nominal (l/min):	0,7 (20bar)
Oil flow without load (l/min):	0,7
Oil flow with load (l/min):	0,06 (700bar)
Oil port:	3/8”NPT
Valve operation:	Advance/Hold/Release
Valve function:	Manual
Power source:	Lithium battery 4.0Ah
Noice (dBA):	Silent
Weight (Kg):	4,5

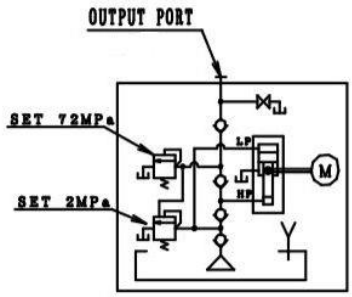

Size:

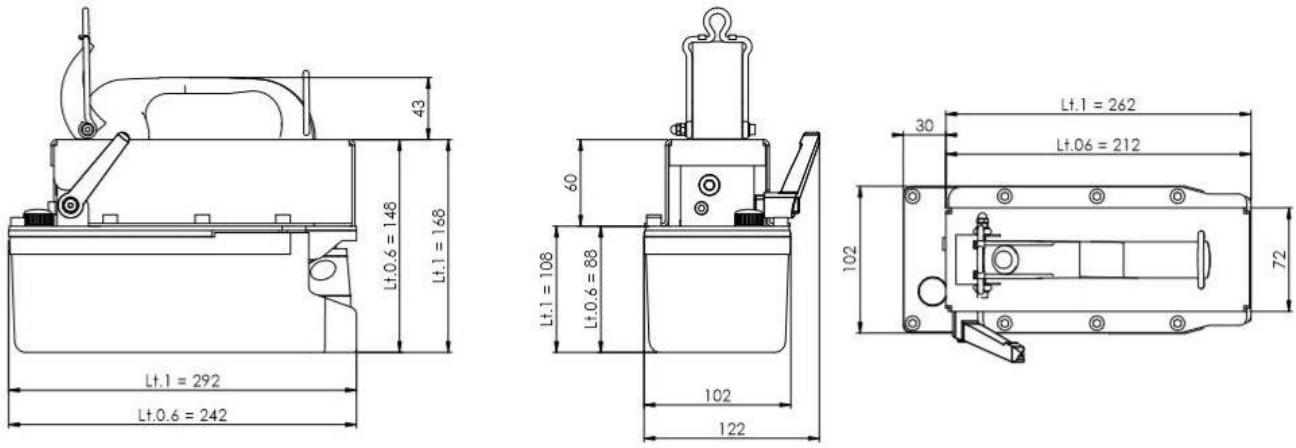

Series comparison:

Tyoe	Max output (bar)	Cylinder	Oil tank (L)	Usable oil (L)	Oil flow w/out load (l/min)	Oil flow with load (l/min)	Power source	Weight (kg)
BDP700-06L	700	S.E.	0,6	0,6	0,7 (20bar)	0,06 (700bar)	Lithium	4,5
BDP700-1L	700	S.E.	1	1	0,7 (20bar)	0,06 (700bar)	Lithium	5
EDPH700	700	D.E.	5	4,1	3,7	0,3	Socket	24,5

To order:

- P/N 940060010 BDP700-06L 700BAR BELL
- P/N 940100010 BDP700-1L 700BAR BELL

Accessories:

- Carrying strap
- Lithium battery 4.0Ah
- Battery charger
- Fitting
- Hose flex

Spare parts:

SEAL KIT BDP

EDPH700 – Electric Driven Pump High Flow

Electro-hydraulic pump, double stage, double acting, push button operation, distributor valve, max oil pressure 700bar, oil flow rate 3.7 - 0.3 l / min (700bar) - tank capacity 5 L

Series: EDP

Product line: Industrial tools, bodywork, auto repairers, lifting systems, clamping systems, punches, hydraulic cutters, bead breakers, shearing machines

- **Ultra compact!**
- **Double HAWE piston pump with cylindrical shaft**
- **Operation with external power supply (socket)**
- **Motor protection casing for heavy duty and durability**
- **Extremely compact design with ergonomic handle for maximum portability**
- **Push button operation (electric motor)**
- **Hand valve 4/3 700bar**
- **Double acting cylinder compatibility**
- **Easy maintenance**
- **Refill oil cap**
- **Preset internal maximum oil pressure output valve to protect the circuit parts against overloads**
- **Pressure gauge**
- **Extremely lightweight**
- **Low noise**
- **Oil tank capacity 5L**

Technical features:

Max working pressure (bar):	700	
Cylinder compatibility:	Double acting	
Oil tank capacity (L):	5	
Usable oil (L):	4,1	
Max oil flow nominal (l/min):	3,7	
Oil flow without load (l/min):	3,7	
Oil flow with load (l/min):	0,3	
Oil port:	1/4G – 3/8G	
Valve operation:	Hand valve	
Valve function:	Manual	
Power source:	AC 230V	
Noise (dBA):		
Weight (Kg):	24,5	

Size:

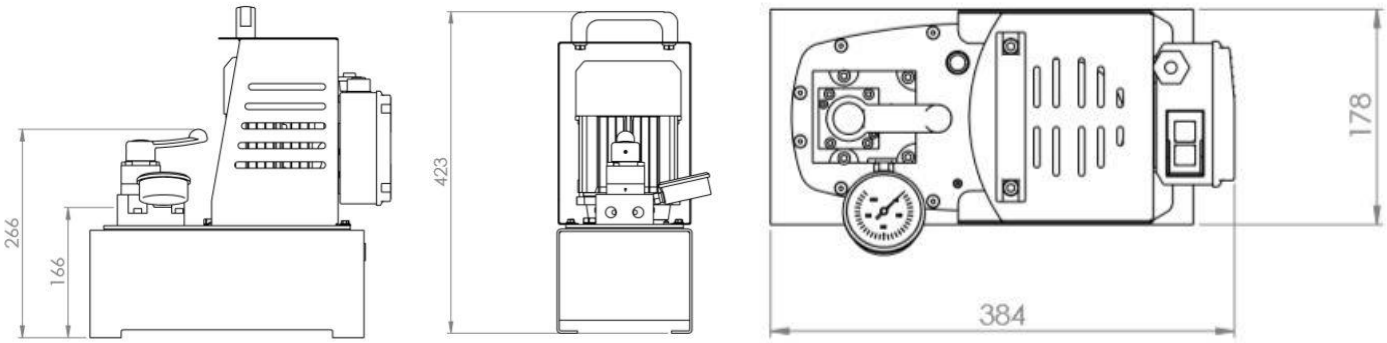

Series comparison:

Tyoe	Max output (bar)	Cylinder	Oil tank (L)	Usable oil (L)	Oil flow w/out load (l/min)	Oil flow with load (l/min)	Power source	Weight (kg)
BDP700-06L	700	S.E.	0,6	0,6	0,7 (20bar)	0,06 (700bar)	Lithio	4,5
BDP700-1L	700	S.E.	1	1	0,7 (20bar)	0,06 (700bar)	Lithio	5
EDPH700	700	D.E.	5	4,1	3,7	0,3	Socket	24,5

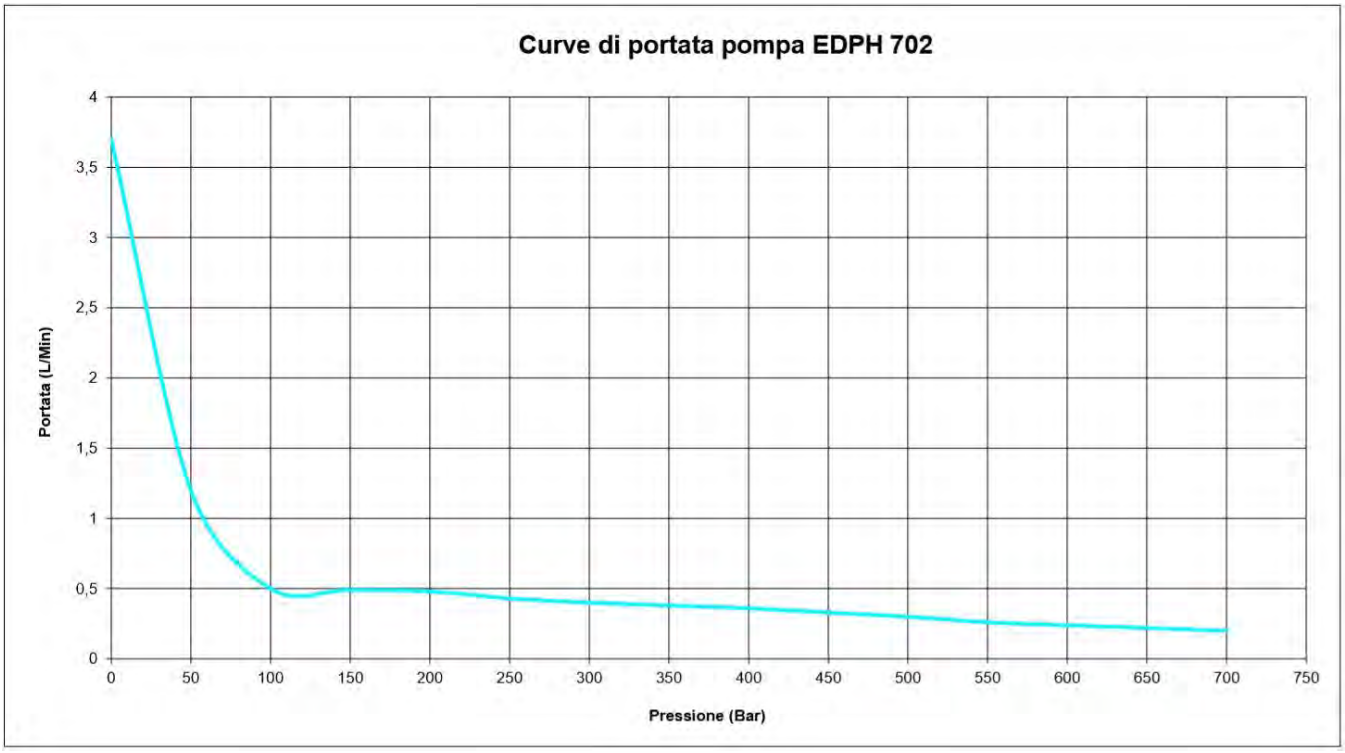

To order:

- P/N CP2018013-025 EDPH700 700BAR BELL

Accessories:

-

Spare parts:
SEAL KIT EDPH

Air-hydraulic pumps for water use (H2O Series) (introduction)

BELL HYDRO-PNEUMATIC PUMPS OF THE H2O SERIES ARE DESIGNED TO BE USED WITH NORMAL WATER OR WATER NETWORK, FOR THE PURPOSE OF PRESSURIZING SPECIFIC CIRCUITS. THEY ARE PARTICULARLY SUITABLE FOR THE THERMO-HYDRAULIC SECTOR AND CAN BE SUPPLIED COMPLETE WITH TANK (2,4L-10L) AND CONNECTIONS TO THE PNEUMATIC NETWORK, OR WITHOUT A TANK DIRECTLY CONNECTED TO THE NORMAL WATER NETWORK BY USING THE 250 MULTI-VOLTAGE PRESSURE.

HIGH PRESSURE OUTPUTS COMBINED WITH LARGE FLOWS IN EXTREMELY COMPACT SIZE AND EASY TO TRANSPORT FOR FIELD USE

All BELL products are designed and manufactured within BELL SRL in via F. De Pisis, 5 - 42124 Reggio Emilia (RE) - Italy, according to the Quality Standards that distinguish the MADE IN ITALY from the Rest of the World.

Ultra AirPump H_2O

UPF252-H²O

Air hydraulic pump, single acting, for water use (H2O), pedal operated, water flow 2.6 l / min (0.7 l / min at full load), water pressure 250bar, tank capacity 2.4L

NEW NEW NEW NEW NEW NEW NEW NEW

Series: UP-H2O

Product line: thermo-hydraulic, thermo-sanitary, civic network, industrial network, control units for plant testing

- **Pedal operation (also available with any other operation device among those in range)**
- **Unmistakable pedal design with handle for easy transport**
- **3-position pedal operation with spring return (advance, hold and release)**
- **Single acting**
- **Compact and sturdy construction for heavy duty and long durability**
- **Easy maintenance**
- **No air lubricated required**
- **It works through the standar pneumatic air network**
- **Versatile use in both vertical and horizontal positions**
- **Preset safety valve on the cover to protect the pump**
- **Maximum water pressure valve adjustable from the outside**
- **Removable pyrex porthole level indicator**
- **Slots on the base support for easy installation**
- **Integral brass pump body**
- **Stainless steel piston**
- **3/8 ”NPTF stainless steel driving block**
- **Internal air filter and water filter**
- **Lightweight**
- **Low noise (75dBa)**
- **Water tank capacity 2,4L for small and medium size systems.**

Technical features:

Max working pressure (bar):	250
Cylinder compatibility:	Single acting
Water tank capacity (L):	2,4
Usable water (L):	2,1
Max water flow nominal (l/min):	0,7
Max water flow without load (l/min):	2,6
Max water flow with load (l/min):	0,7
Output port:	3/8”NPTF INOX
Air port:	G1/4”
Valve operation:	Advance/Hold/Return
Valve function:	Manual
Power supply:	Air
Source of use:	Water H2O
Pneumatic range (bar):	2,8-8,3 (10 max)
Averange air consumption (l/min):	180/390
Noise (dBA):	75
Weight (Kg):	6,7

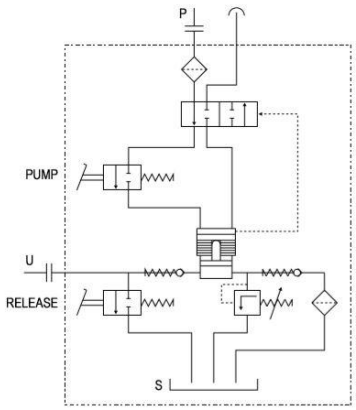

Size:

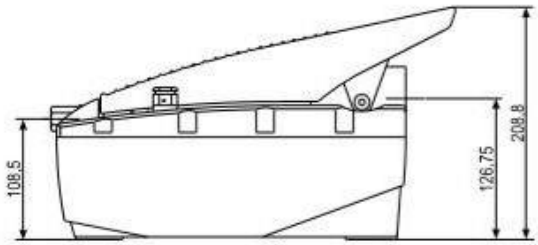

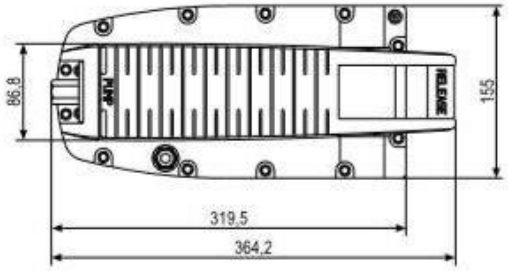

Series comparison:

Type	Output Max (bar)	Cyl	Tank (L)	Usable (L)	Flow w/out load (l/min)	Power supply	Flow with load (l/min)	Air range (bar)	Air consumpt (l/min)	Weight (kg)
UPF252-H20	250	S.E.	2,4	2,1	8,5	Air	0,7	2,8-8,3	180/390	6,7
UPM2510-H2O	250	D.E.	10	9,6	8,5	Air	0,7	2,8-8,3	180/390	12,91
UPW250-H2O	250	S.E.	/	/	4,9	H2O	0,7	2,8-8,3	/	1,5

To order:

- P/N 915201430 UPF252 250BAR WATER USE
- P/N 915201440 UPF252 250BAR WATER USE (NO TANK)

Accessories:

- Fixing plates
- Parking feet
- Pivoting wheels
- Hose flex

Spare parts:

P/N 800050080 SEAL KIT UPF252-H2O

Ultra AirPump H_2O

UPM2510-H²O

Air-hydraulic pump, double acting, CETOP 3 connection, 4/3 stainless steel distributor valve, water flow 0.7 (l / min) at 250bar

---

Series: UP-H2O

Product line: thermo-hydraulic, thermo-sanitary, civic network, industrial network, control units for testing

- **Two-position pedal (advance / hold) lockable in advance on automatic systems**
- **CETOP 3 universal connection**
- **Stainless steel 4/3 way hand valve**
- **Double acting**
- **Compact and sturdy construction for heavy duty and long durability**
- **Easy maintenance**
- **No air lubricated required**
- **It works through the standar pneumatic air network**
- **Versatile use in both vertical and horizontal positions**
- **Preset safety valve on the cover to protect the pump**
- **Maximum water pressure valve adjustable from the outside**
- **Removable pyrex porthole level indicator**
- **Slots on the base support for easy installation**
- **Integral brass pump body**
- **Stainless steel piston**
- **1/4" BSP stainless steel driving block**
- **Internal air filter and water filter**
- **Lightweight**
- **Low noise (75dBa)**
- **Water tank capacity 10l for big size systems**
- **Ergonomic handles for easy transport**

Technical features:

Max working pressure (bar):	250
Cylinder compatibility:	Double acting
Water tank capacity (L):	10
Usable water (L):	9,6
Max water flow nominal (l/min):	0,7
Max water flow without load (l/min):	2,6
Max water flow with load (l/min):	0,7
Output port:	G1/4" - INOX
Air port:	G1/4"
Valve operation:	Advance/Hold/Hand valve
Valve function:	Automatic/Manual
Power supply:	Air
Source of use:	Water H2O
Pneumatic range (bar):	2,8-8,3 (10 max)
Averange air consumption (l/min):	180/390
Noise (dBA):	75
Weight (Kg):	12,9

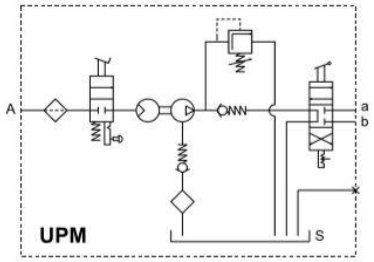

Size:

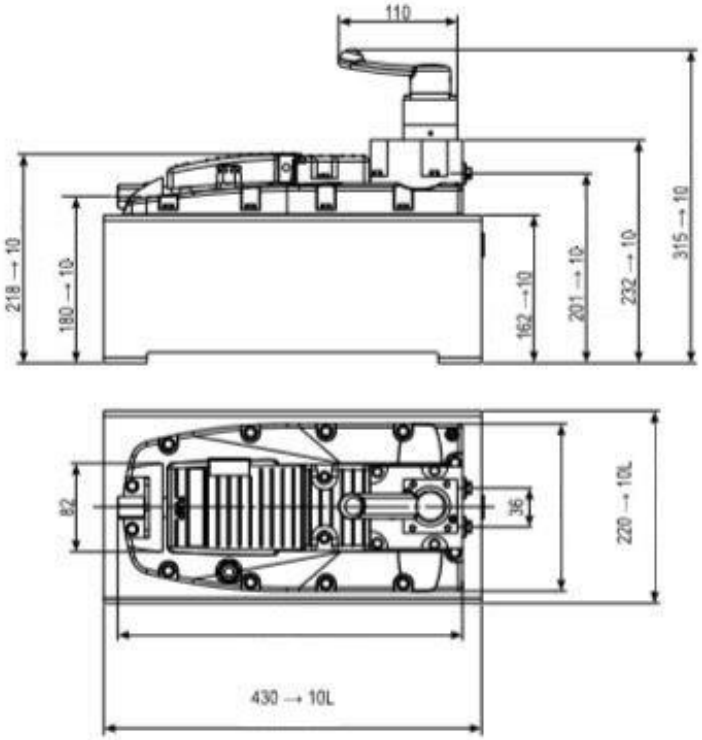

Series comparison:

Type	Output Max (bar)	Cyl	Tank (L)	Usa ble (L)	Flow w/out load (l/min)	Power supply	Flow with load (l/min)	Air range (bar)	Air consumpt (l/min)	Weight (kg)
UPF252-H20	250	S.E.	2,4	2,1	8,5	Air	0,7	2,8-8,3	180/390	6,7
UPM2510-H2O	250	D.E.	10	9,6	8,5	Air	0,7	2,8-8,3	180/390	12,91
UPW250-H2O	250	S.E.	/	/	4,9	H2O	0,7	2,8-8,3	/	1,5

To order:

- P/N 915330510 UPM2510 200BAR WATER USE

Accessories:

- Pressure gauge kit
- Parking feet
- Pivoting wheels
- Hose flex

Spare parts:

SEAL KIT UPM2510-H2O

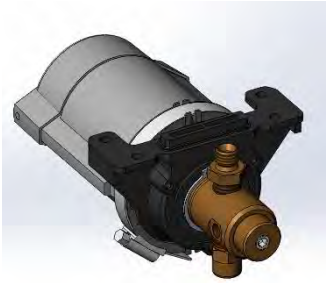

Ultra AirPump H_2O

UPW250-H²O

Hydro-pneumatic motor, for water use (H2O), water flow rate from the water mains, water pressure up to 250bar, without tank

---

Series: UP-H2O

Product line: thermo-hydraulic, thermo-sanitary, civic network, industrial network, control units for testing

- **Complete pneumatic motor, ready for installation**
- **It works through the normal water supply (H2O)**
- **Single/Double acting**
- **Easy maintenance**
- **Valvola di massima pressione idrica tarabile**
- **Corpo pompa integrale in ottone**
- **Pompante in acciaio Inox**

Specifiche tecniche:

Max working pressure (bar):	250	
Cylinder compatibility:	Singolo/Doppio Effetto	
Max water flow nominal (l/min):	0,7	
Max water flow without load (l/min):	2,6	
Max water flow with load (l/min):	0,7	
Water port:	G1/4” - INOX	
Inlet port:	G1/4”	
Power source:	Water	
Source of use:	Water H2O	
Pneumatic range (bar):	/	
Average air consumption (l/min):	/	
Noise (dBA):	/	
Weight (Kg):	1,5	

Size:

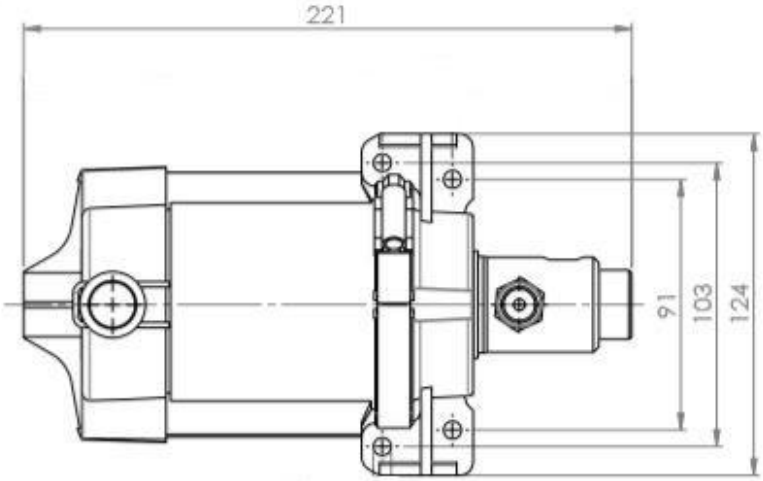

Series comparison:

Type	Output Max (bar)	Cyl	Tank (L)	Usable (L)	Flow w/out load (l/min)	Power supply	Flow with load (l/min)	Air range (bar)	Air consumpt (l/min)	Weight (kg)
UPF252-H20	250	S.E.	2,4	2,1	8,5	Aria	0,7	2,8-8,3	180/390	6,7
UPM2510-H2O	250	D.E.	10	9,6	8,5	Aria	0,7	2,8-8,3	180/390	12,91
UPW250-H2O	250	S.E.	/	/	4,9	H2O	0,7	/	/	1,5

To order:

- P/N 915080040 UPW250 UP PUMP MOTOR WATER US

Spare parts:

SEAL KIT UPW250-H2O

Pump accessories
(HP - UP - DBP Series)
(introduction)

ALL BELL PUMPS CAN BE CUSTOMIZED ACCORDING TO YOUR NEEDS!

- **Tanks and lids of different colors (special colors on demand))**
- **Steel tanks of different oil capacities**
- **Several kits available, from protection to technical upgrade.**
- **Fixing plates and / or pivoting wheels to move our pumps without having to lift them.**
- **Lithium batteries and spare battery charger**

Additional benefits:

- **Quick return kit for ultra-rapid hydraulic returns even with large cylinders**
- **Remote controls with 2 or 3 buttons or with emergency stop device**
- **3-way auxiliary pedal kit for pneumatic applications**

All BELL products are designed and manufactured within BELL SRL in via F. De Pisis, 5 - 42124 Reggio Emilia (RE) - Italy, according to the Quality Standards that distinguish the MADE IN ITALY from the Rest of the World.

COLORED HP TANKS

Colored tanks for HP pumps 1.4L capacity

Series: Accessories

Product line: HP series, air-hydraulic pumps

- **Made of PA6-GF30 fiberglass polyamide**
- **Composition Ultramid B3EG6 EQ bk 23189**
- **Very high mechanical resistance**
- **Resistant to various oils, greases and fuels**
- **Good wear resistance**
- **Easily welded and glued**
- **High dimensional stability**
- **Good thermal distortion temperature**
- **Good workability**
- **1.4 L capacity (1.1 usable oil)**
- **RAL-type colors (more colors on demand))**

Description

PA6-GF30 is a 30% glass fiber reinforced polyamide. Provides superior strength, rigidity and dimensional stability compared to unfilled polyamide 6. These properties of PA6 GF30 make it suitable for use in parts that will remain exposed for a long time to high static loads and high temperatures.

To order:

309310010	HP TANK WHITE
309310014	HP TANK ORANGE
309310016	HP TANK BLUE RAL5015
309310011	HP TANK BLACK
309310012	HP TANK RED

OVERSIZED HP OIL TANKS

Steel oil tanks for HP Series air-hydraulic pumps, oil capacity 2.5L (SL) and 4L (XL)

Series: Accessories

Product line: HP series, air-hydraulic pumps

- **Made of painted steel**
- **Maximum resistance to shocks, rubbing, high temperatures, deformation**
- **Durability over time**
- **Side slots for installation on the application (or for inserting parking feet and / or pivoting wheels)**
- **SL tank with 2.5L capacity (2.15L usable)**
- **XL tank with 4L capacity (3.5L usable)**
- **Standard color: black**
- Other colors on demand (MOQ required)

Description

The oversized SL and XL tanks of the HP Series are useful accessories to increase the capacity of the HP air-hydraulic pumps and allow the complete extension of large cylinders. 2.5 and 4L capacities for maximum versatility. Entirely made of steel and powder coated in black.

Size:

SL

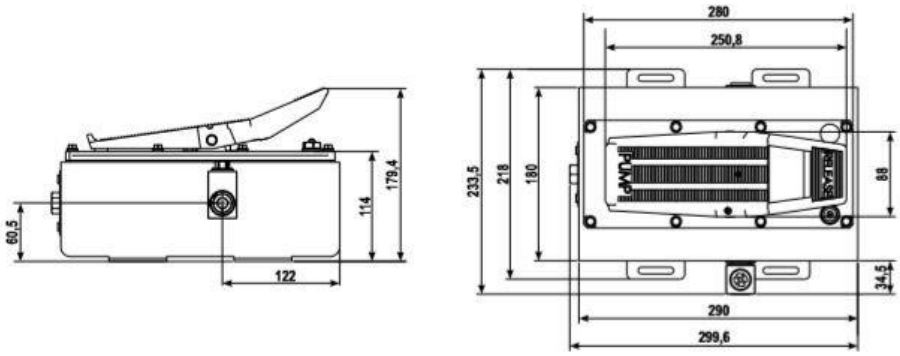

XL

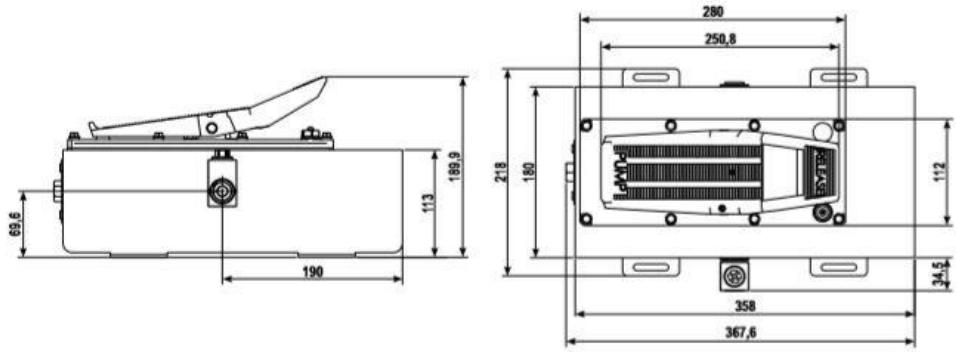

To order:

305170090	HP OIL TANK SL 2,5L BLACK
305170100	HP OIL TANK XL 4L BLACK
3051700xx	KIT HP OIL TANK SL-XL

Including:

- Delivery and relief valve fittings
- Lid / tank gasket
- Air flange

HP PEDAL PROTECTION KIT

HP model pump pedal guard kit to prevent any involuntary activation

---

Series: Accessories

Product line: HP Series, HP pedal model, air-hydraulic pumps, industrial tools, lifting systems

- **Functional, lightweight yet impact resistant design**
- **Thickness 3mm**
- **Powder coating black RAL9005**
- **Ergonomics along with the HP 3-position pedal**
- **Height suitable for use with work shoes**
- **Fixing screws included in the kit**

To order:

830000010 KIT PEDAL PROTECTION HP

HP series & Ultra AirPump

PNEUMATIC PEDAL KIT

3-way auxiliary pedal kit for pneumatic applications

Series: Accessories

Product line: HP Series, UP Series, air-hydraulic pumps, industrial tools, lifting systems, clamping, pneumatic applications

- **3-way auxiliary pedal kit**
- **3V/2P mini valve and cables included**
- **Compatibility with the UPR air-hydraulic pump & the HP-RC pump**
- **Sturdy and stable construction for long durability**
- **Black painted**
- **Parking feet included**

Description:

This auxiliary pedal kit is useful for external pneumatic piloting or as an alternative to the remote controls of our UPR UP Series and HP-RC HP Series pumps.

Connects directly to pneumatic RC sockets through the supplied wiring.

The shell is made of painted steel, particularly robust and suitable for heavy use.

The parking feet (included in the kit) make the pedal very stable and firm during use.

Technical features:

Type:	Pneumatic	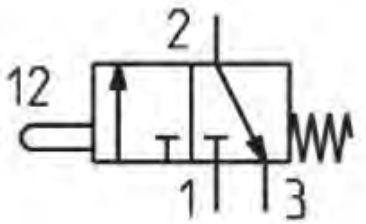
Valve operation:	Manual	
Valve function:	Advance/Release	
Application compatibility:	UPR /HP-RC	
Paint:	Black	
Weight (Kg):		

To order:

830150770 AUX PEDAL KIT

Ultra AirPump

PAINTED STEEL TANKS

Powder coated steel tanks for UP Series pumps of various capacities and sizes

---

Product line: UP Series, air-hydraulic pumps

- **Made of treated steel**
- **Laser cutting, bending, welding, washing / degreasing and anti-corrosion treatment**
- **Powder coating (UNI ISO 12944) BLACK RAL 9005 thickness 80/100µm**
- **High quality strength**
- **Excellent wear resistance**
- **High dimensional stability**
- **Excellent resistance to temperature and deformation**
- **Side porthole for oil level indicator in Pyrex**
- **Various oil capacities (5-7-10-12-20 liters)**
- **Other RAL colors on demand (MOQ required)**

Size:

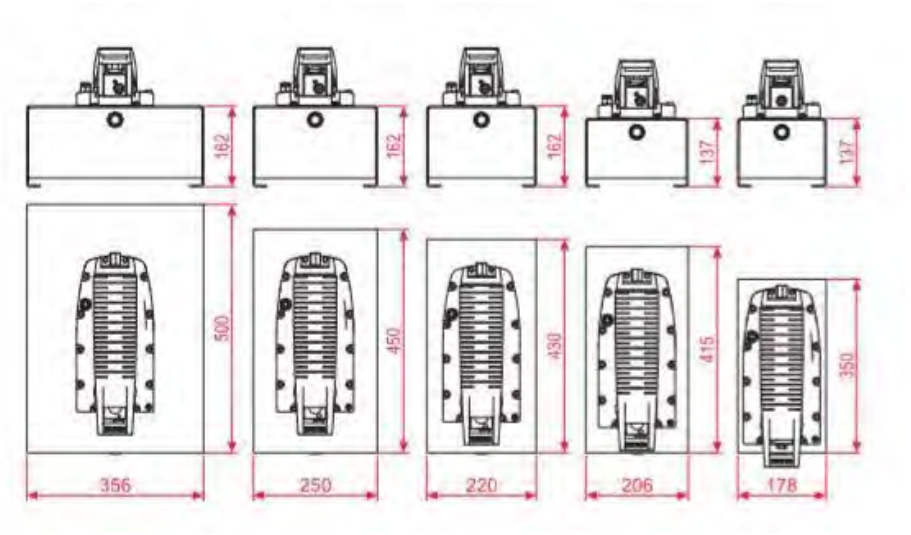

To order:

305170110	TANK UP 5LT BLACK R9005
305170120	TANK UP 5LT RED R2002
305170125	TANK UP 5LT RED R3000
305170130	TANK UP 7LT BLACK R9005
305170140	TANK UP 10LT BLACK R9005
305170150	TANK UP 12LT BLACK R9005
305170160	TANK UP 20LT BLACK R9005

Note:

n case of replacing the standard 2,4L tank with any of the steel tanks, it is also necessary to purchase the TANK CONVERSION KIT which includes the cover / tank gasket for oversized steel tanks (139220116) and 12 self-drilling screws M5x15 (E26200566)

Ultra AirPump

COLORED UP TANKS

Colored tanks for UP pumps capacity 2,4L

Series: Accessories

Product line: UP Series, air-hydraulic pumps

- **Molded tanks, made of Polypropylene + 30% mineral carbon**
- **Ergonomic shape along with the UP cover**
- **High quality mechanical resistance**
- **Resistant to various oils, greases and fuels**
- **Good wear resistance**
- **Easily welded and glued**
- **High dimensional stability**
- **Good thermal distortion temperature**
- **Good workability**
- **Side porthole for oil level indicator in Pyrex**
- **Capacity 2,4 L (usable oil 2,1)**
- **Different colors for product customization**
- **Other RAL colors on demand (MOQ required)**

To order:

309310030 (standard) UP GREY R.7035

309310031 UP BLACK RAL9005

309310032 UP RED RAL2002

309310033 UP YELLOW RAL1018

Ultra AirPump

COLORED UP COVERS

Colored covers for UP pumps

Series: Accessories

Product line: UP Series, air-hydraulic pumps

- **Molded covers made of Nylon6 + 30% mineral fillers**
- **Ergonomic shape molded to the standard 2.4L UP tank**
- **High quality mechanical resistance**
- **Resistant to various oils, greases and fuels**
- **Good wear resistance**
- **Easily welded and glued**
- **High dimensional stability**
- **Good thermal distortion temperature**
- **Good workability**
- **Capacity 2,4 L (usable oil 2,1)**
- **Different colors for product customization**
- **Other RAL colors on demand (MOQ required)**

To order:

182840010 (standard) MOLDED COVER UP BLUE RAL5002

182840011 MOLDED COVER UP BLACK RAL9005

182840012 MOLDED COVER UP YELLOW RAL1018

FIXING PLATES

Fixing plates made of steel to stable the 2.4L UP Series pumps

---

Series: Accessories

Product line: UP Series, air-hydraulic pumps

- **Complete kit: 2 fixing plates + 4 self-tapping screws Ø5x16mm**
- **Fixing plates made of steel powder coated in black color**
- **Compatibility with standard 2.4L UP Series oil tanks**
- **Applicable to the tank holes both longitudinally and vertically**
- **Slots for installation on the application**
- **Instructions for drilling template**

To order:

870100010 FIXING PLATE KIT UP

Ultra AirPump

REMOTE PENDANTS

Pneumatic controls for HP Series and UP Series, with 2 or 3 buttons for emergency (air cut off) or on/off safety purpose

---

Series: Accessories

Product line: HP Series, UP Series, pneumohydraulic pumps, various applications

- **Pneumatically operated remote controls for comfortable and precise operatoions**
- **Ergonomic contoured shape for easy grip**
- **Made entirely of anodized aluminum**
- **Maximum resistance and reliability during operations**
- **Pneumatic buttons with spring return for activations with consent**
- **2-button function for delivery (pump) and drain (release)**
- **3 button on / off function to avoid any unintentional activation**
- **Double button function with emergency to interrupt the pneumatic circuit**
- **Super quick couplers for fast connection**
- **Anchor hook**
- **Rilsan protection sheaths and air pipes available on request (length to measure)**

To order:

830150410 (Standard) 2 BUTTON REMOTE CONTROL KIT

830150411 (On/Off) 3 BUTTON REMOTE CONTROL KIT

830150412 (Air cut) 2 B. REMOTE CONTROL+EMERGENCYKIT

Ultra AirPump

UPF QUICK RETURN KIT

Double release valve kit for ultra-fast cylinder return speeds.

Compatible with UPF pump model

Series: Accessories

Product line: UP Series, UPF model, pneumohydraulic pumps, industrial tools, lifting systems, large cylinders

- **For large and high volume hydraulic cylinders**
- **Compatibility with single acting cylinders**
- **Double release valve driving block**
- **3-position pedal for quick exhaust kit**
- **Black RAL9005 powder coating**
- **Easy install**
- **Complete kit for conversion**

Description:

In combination with large cylinders and oil volumes, a fast re-entry of the cylinder during the release phase can make a difference on execution times.

BELL QUICK DISCHARGE KIT on the UPF air hydraulic pump types allows ultra-fast returns!

This is a great advantage when you need to save your working time.

To order:

830000030 UPF QUICK RETURN KIT

Ultra AirPump

UPF PEDAL PROTECTION KIT

UPF pedal protection kit to prevent any type of involuntary actuation

---

Series: Accessories

Product line: UP Series, UPF model, air-hydraulic pumps, industrial tools, lifting systems

- **Functional, lightweight yet impact resistant design**
- **Thickness 3mm**
- **Powder coating black RAL9005**
- **Ergonomics along with the 3-position UPF pedal**
- **Height suitable for use with work shoes**
- **Fixing screws included in the kit**

To order:

830000020 UP PEDAL PROTECTION KIT

UPF – PRESSURE GAUGE KIT

Kit to install a pressure gauge on the UPF pump type

Series: Accessories

Product line: UP Series, UPF, air-hydraulic pumps

- **Complete kit for installing a pressure gauge on the UPF pump type**
- **Main driving block with front holes**
- **Additional 3-way pressure gauge block**
- **Oil port 3/8”NPTF**
- **Pressure gauge Ø63mm, range 0-1000bar**
- **Gauge port 1/4"G**
- **Fixing screws to the main driving block**
- **Blocks treated with anticorrosion against external agents for maximum durability over time**

Size:

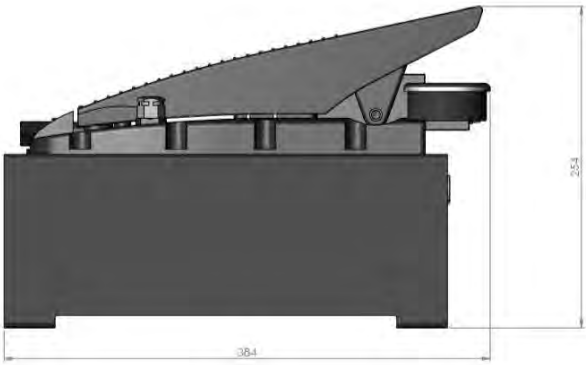

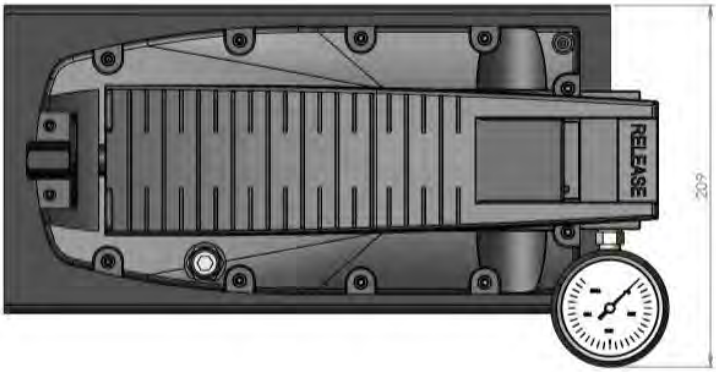

To order:

CP2018005 PRESSURE GAUGE KIT UP

PARKING FEET

Support kit for oversized tanks, and hydraulic hand pump slides

---

Series: Accessories

Product line: UP Series, HP Series, HFP Series, oversized tanks, air-hydraulic pumps

- **Parking feet kit for all UP and HP Series oversized tanks**
- **Kit also compatible with HFP Series hydraulic pumps**
- **Rubber material with insert**
- **Anti-vibration**

Description:

The anti-vibration parking feet are made of soft and elastic material and adapt perfectly to the support surfaces, making the pump much more stable during operation and protected from any dragging.

To order:

E28300100 RUBBER FEET D30X20+INSERT M8

E28300065 ANTI-VIBRATION FEET D 20 H 6

PIVOTING WHEELS

Kit for oversized tanks of the HP and UP Series to trolley transport

---

Series: Accessories

Product line: UP Series, HP Series, oversized tanks, air-hydraulic pumps

- **Pivoting wheels for all the oversize oil tanks of the UP and HP air-hydraulic pump series**
- **Parking brake**

The pivoting wheels can be installed very easily for converting the air-hydraulic pumps of the UP and HP Series into real trolleys. Especially useful when combined with large oil capacity oil tanks which are more bulky and heavier than the standard one.

With the pivoting wheels kit, any handling will become simple and immediate, without effort, lifting and dragging.

To order:

P/N 465000010 PIVOTING WHEEL Ø 40 PIN M8X30

P/N 465000015 PIVOTING WHEEL Ø40 PIN M8X30 + BRAKE

LEVEL SWITCH KIT

UPHC, tilting level switch kit, compact float switch, 1/2 "NPT external connection

Series: Accessories

Product line: UP Series, UPHC model, pneumohydraulic pumps, industrial tools, clamping systems, actuators, complex hydraulic systems, automations

- **Tilting level switch kit**
- **Float switch**
- **½ ”NPT circular connector socket**
- **Horizontal installation**
- **Internal or external mounting**
- **Hydraulic oil and other fluids compatibility**
- **Plastic material (nylon, polypropylene)**
- **Flying conductor**

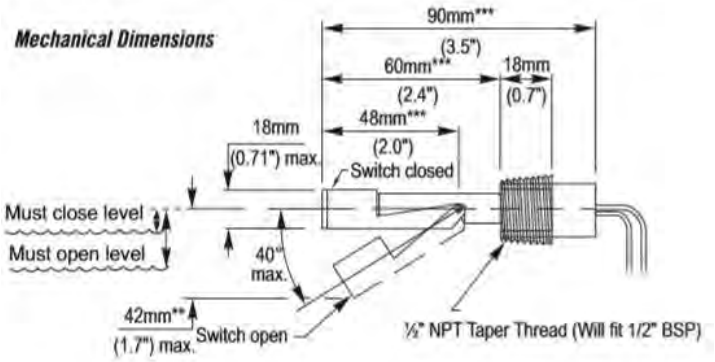

Description:

This level switch kit is designed to be installed on the tank wall through a ½ "NPT port with no need to access the tank itself.

Construction in plastic material to adapt to the most commonly used types of fluid.

The float switch can be mounted for both rising (N / A) and falling (N / C) reading.

Main fields of application:

Typical applications, in addition to housing in the tanks of our air-hydraulic pumps and in any other application with hydraulic oil, are diesel generators and gearboxes in the automotive field.

Technical features:

Material:	Nylon	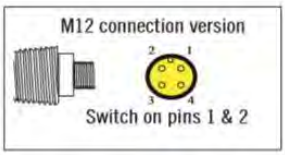
Color:	Black	
Minimum working temperature (°C):	-20	
Max working temeperature (°C):	+75	
Max electric current (mA):	600	

To order:
830150630 LEVEL SWITCH KIT UPHC

Ultra AirPump

PRESSURE SWITCH KIT

UPHC, diaphragm pressure switch kit for high pressure, up to 600bar

---

Series: Accessories

Product line: UP Series, UPHC model, pneumohydraulic pumps, industrial tools, clamping systems, actuators, complex hydraulic systems, automations

- **Pressure switch kit complete with protection cap**
- **Max safety pressure 600bar**
- **Adjusting screw**
- **Body in galvanized steel**

Description:

In the industrial and automotive applications it is frequently required that a previously set pressure value is transformed into an electrical signal, used to start the machine cycle or to signal a certain condition. (eg. system leaks, alarms, etc.). Such operations are generally managed by components, calibrated according to the application, which are called pressure switches.

The calibration is made throughwith an adjustment screw which, acting on a spring, defines its load. This spring is opposed to the pressure exerted by the fluid on the diaphragm, allowing the closing (or opening) of the electrical contact only when the calibration pressure is reached.

Technical features:

Body	Galvanized steel
Electric contacts	Silver AgNi (gold plated on request)
Electrical condition	N.A. (bordeaux)
Max switched voltage	48 V ac/dc (250V on request)
Max switched current	0.5A (2A on request)
Max fluid temperature	80° a 120°C depending on diaphragm
Max Overpressure limit	600 bar
Max Working pressure	300 bar
Action type	1B
Protection	IP 00
Weight	~ 70 g

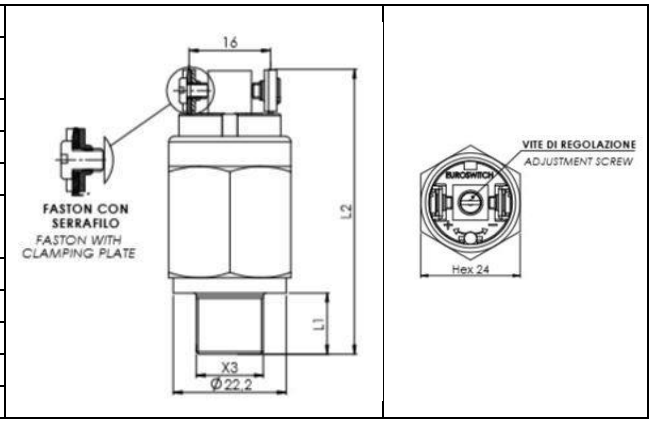

Per ordinare:
830150620 KIT PRESSURE SWITCH UPHC

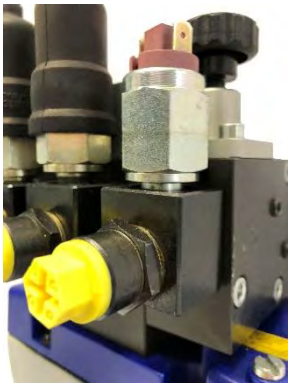

Ultra AirPump

UPHC MECHANICAL VALVE BLOCK MODULE KIT

Mechanically operated-additional modular pressure kit
Compatible with UPHC model pump

Series: Accessories

Product line: UP Series, UPHC type, pneumohydraulic pumps, industrial tools, clamping systems, actuators, complex hydraulic systems, automations

- **Modular kit to be applied to the main control system of the UPHC pump type of the UP Series**
- **Mechanical operation (manual)**
- **Up to 5 simultaneous applications, independent of each other, with the same air-hydraulic pump**

To order:

830150610 UPHC MANUAL VALVE KIT

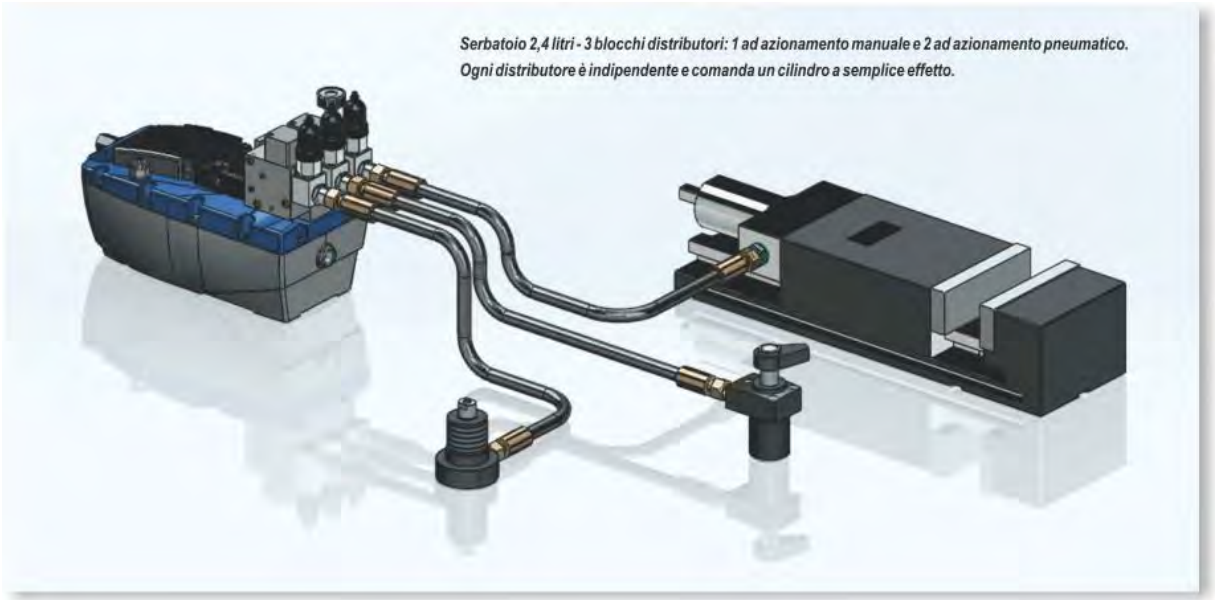

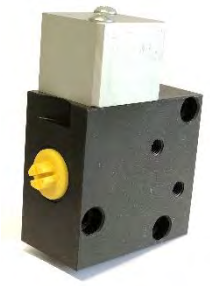

Ultra AirPump

UPHC PNEUMATIC VALVE BLOCK MODULE KIT

Pneumatically operated-additional modular pressure kit
Compatible with UPHC model pump

Series: Accessories

Product line: UP Series, UPHC type, pneumohydraulic pumps, industrial tools, clamping systems, actuators, complex hydraulic systems, automations

- **Modular kit to be applied to the main control system of the UPHC pump type of the UP Series**
- **Pneumatic operation**
- **Up to 5 simultaneous applications, independent of each other, with the same air-hydraulic pump**

To order:

830150600 PNEUMATIC VALVE KIT UPHC

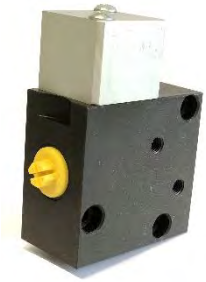

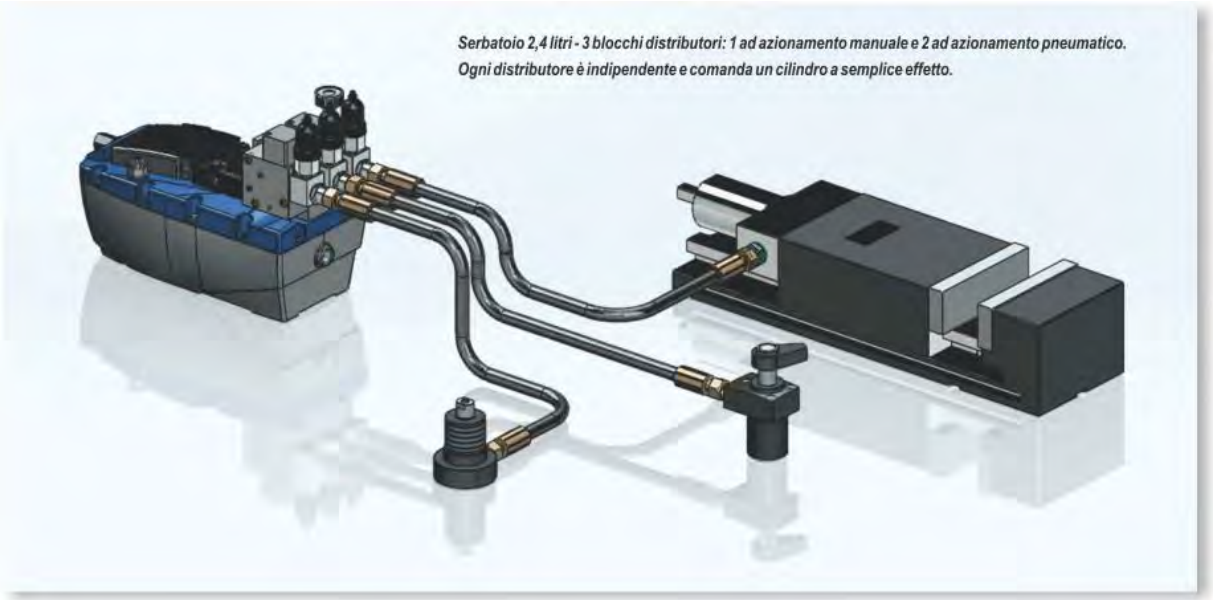

LITHIUM BATTERY 14.4V-4.0AH

Lithium-ion battery, rechargeable, for power tools, slide housing

---

Series: BDP

Product line: Pump accessories, battery-operated hydraulic pumps, power tools, industrial tools

- **Lithium-ion battery**
- **Rechargeable**
- **Suitable for any type of electric tool with slide housing**
- **Up to 50 times of use at maximum pressure, under stress**
- **Slide housing**
- **In compliance with the international safety regulations UN3481**
- **Lightweight**
- **Supplied in-box**
- **Use and maintenance booklet included**

Technical features:

Voltage (V):	14.4	
Capacity (AH):	4.0	
Compatibility:	BDP Series	
Weight (Kg):	0,5	

To order:

492450010 LITHIUM BATTERY 14.4V-4.0AH BDP700

LITHIUM BATTERY CHARGER

UC18YFSL - lithium-ion battery charger, for power tools, sled attachment

NEW NEW NEW NEW NEW

Series: BDP

Product line: Pump accessories, battery-operated hydraulic pumps, power tools, industrial tools

- **Lithium-ion battery charger**
- **Compatibility with multiple BSL Series Li-ion batteries with slide housing**
- **Essential for charging the batteries when the powertool is not in use**
- **Slide connection**
- **Single housing**
- **Indoor use**
- **Battery charger voltage 18V**
- **Mains power supply 220-240V**
- **European 2-pole socket plug**
- **Built-in fan**
- **Weight 500gr**

Technical features:

Compatibility:	Lithium batteries with slide housing	
Batteries supported:	1	
Fan:	Built-in	
Input frequency:	50/60	
Battery charger voltage (V):	18	
Mains power supply (V):	220-240	
Charging:	3.5	
Pump compatibility:	BDP Series	
Environment compatibility:	Indoor	
Product compatiblity:	BSL1415, BSL1415X, BSL1425, BSL1815, BSL1815X, BSL1825, BSL1420, BSL1430, BSL1450, BSL1830, BSL1440, BSL1840, BSL1850	
Weight (Kg):	0,5	

To order:

492450020 BATTERY CHARGER BDP700

System Parts
(HP - UP - DBP Series)
(introduction)

ALL BELL PUMPS CAN BE EQUIPPED WITH HIGH-QUALITY SYSTEM COMPONENTS, ESSENTIAL FOR PROPER OPERATION

- Flexible hoses for high and very high pressure hydraulic systems
- Analog pressure gauges
- Hydraulic and electro-hydraulic valves, descent control valves, check valves, flow valves, ...
- Quick couplings and couplings, air and delivery valves, fittings for housing pressure gauges, ...
- Advanced synthetic hydraulic oils, with high energy efficiency, also biodegradable

All BELL products are designed and manufactured within BELL SRL in via F. De Pisis, 5 - 42124 Reggio Emilia (RE) - Italy, according to the Quality Standards that distinguish the MADE IN ITALY from the Rest of the World.

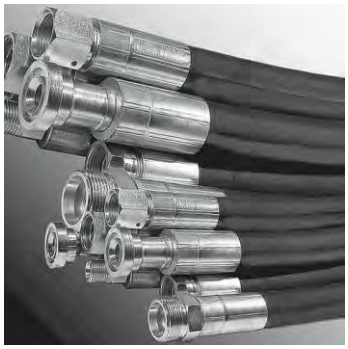

FLEXIBLE HYDRAULIC HOSES

FLEX-352, Flexible hose for very high pressure hydraulic systems, minimum burst pressure 2800bar

---

Series: System Parts

Product line: Industrial tools, locking systems, Pumps and Power Units at high and very high pressure, Filters, Cylinders, Industrial Vehicles, Hydraulic circuits at very high pressure, rescue equipment (eg Fire Brigade), lifting.

- **Meets DMQ approved specifications (impulse tested 110% of declared dynamic pressure)**
- **DMQ approved fittings**
- **Pipe marking in compliance with the regulations in force**
- **Anti-tear and anti-puncture sheath against any possible leakage of pressurized oil**
- **Standard length 3m**
- **Other lengths on demand**

Technical features:

Max working pressure (bar):	1500
Minimum burst pressure (bar):	2800
Maximum oil flow (l/min):	incorporated
Internal diameter (mm):	6,6
Outer diameter (mm):	13,7
Standard hose length (m):	3
Minimum bending radius (mm):	38
Type ring:	JET04-352-bzp
Environment compatibility:	indoor/outdoor
Weigth (kg/m):	0,23

To order:

P/N	DESCRIPTION	PORT	L	
913300090	HOSE FLEX 352-4 3/8 700BAR MT3	3/8”NPTF	3 MT	PROTECTIVESHEATH
913300091	HOSE FLEX 352-4 3/8 700BAR MT3 + IRM 3/8	3/8”NPTF	3 MT	QUICK COUPLING
913300093	HOSE FLEX 352-4 G1/4M-M 700B MT2	1/4"G	2 MT	
913300094	HOSE FLEX 352-4 G1/4M-M 700B MT3	1/4"G	3 MT	
913300095	HOSE FLEX 352-4 3/8M-M 700B MT2	3/8”NPTF	2 MT	PROTECTIVESHEATH

ANALOG PRESSURE GAUGES

Bottom entry, 63mm diameter (Ø), pressure reading scale in bar and psi, radial or conical connection

Series: System Parts

Product line: Industrial tools, clamping systems, pressure gauges, pneumohydraulic pumps, hydraulic pumps, hydraulic systems, equipment, compressors, naval industry

- **Diameter (Ø) 63mm**
- **Compatibility with gases and liquids which don't obstruct the pressurized systems or affect the alloy parts made of copper**
- **Stainless steel case**
- **Sturdy structure**
- **Resistance to impulses, shocks and vibrations**
- **Analogue pressure gauge in glycerine bath**
- **Movement in copper alloy**
- **Reading range in bar and psi**
- **Maximum precision**
- **Working temperatures -20°C +60°C**
- **Radial/Conical connections**

Technical features:

Minimum pressure measurement:	0
Maximum pressure measurement:	1.000bar (14.500psi)
Type:	Bottom entry
Outer diameter (mm):	63
Port:	1/4" BSPT – 1/4" G
Case:	Stainless steel
Minimum operating temperature (°C):	-20
Maximum operating temperature (°C):	+60

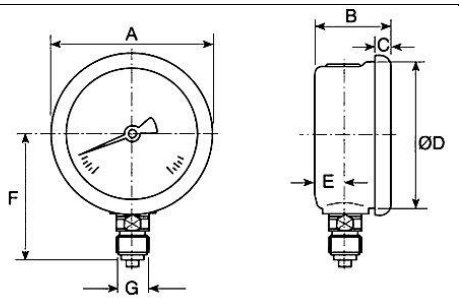

To order:

455040020 PRESSURE GAUGE D.63 -RANGE 0/1000BAR 1/4"BSPT RADIAL

E45100020 PRESSURE GAUGE D.63 - RANGE 0/400BAR G1/4

HAND VALVE 700BAR

4/3 (4-way-3-position) hand valve, manually operated, Cetop3 connection, working pressure up to 700bar

---

Series: System Parts

Product line: Industrial tools, clamping systems, Pumps and Power Units, Filters, Cylinders, Industrial Vehicles, Hydraulic Circuits

- **Standard on all UPM pumps of the UP Series**
- **Manual operation throughwith an ergonomic lever**
- **4-way / 3-position valve (A-T-B)**
- **Open center**
- **Compatibility with single and double acting systems**
- **O-Ring seals in NBR 90SH**
- **Different flow configurations**
- **Body and valve parts in treated and anodized aluminum**
- **Materials resistant to stress even in harsh working conditions**
- **Anti-corrosion treatments for long durability over time**
- **Pressure drop ≈ 0 (zero leaking)**

Technical features:

Max working pressure (bar):	700	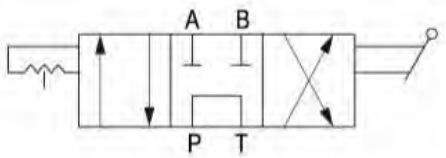
Max oil flow (l/min):	10	
Valve operation:	manual	
Flange:	Cetop 03	
Center:	open	
Seal:	NBR 90SH	
Weight (kg):	0,4	

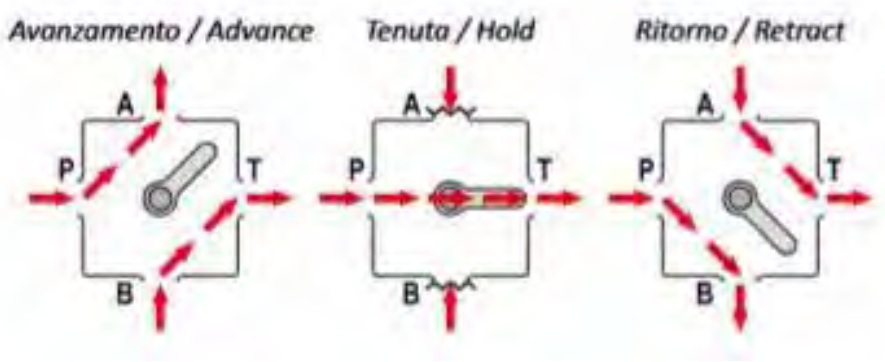

Size:

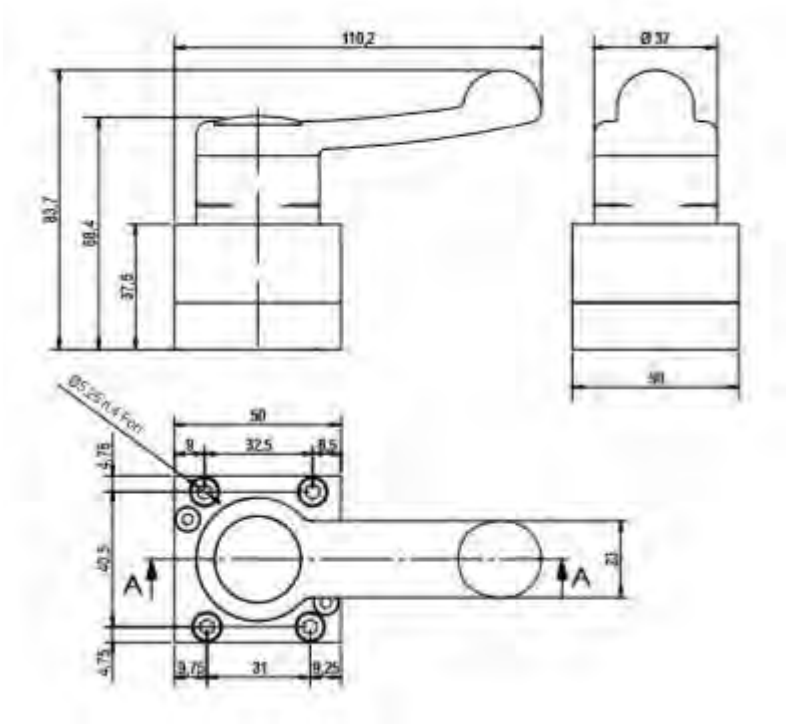

To order:

990100010	HAND VALVE 4/3 700BAR	Standard
990100015	HAND VALVE 4/3 700BAR LEVER 180	Lever rotated 180°
990100011	HAND VALVE 4/3 700BAR STEEL	Lever made of steel
990100020	HAND VALVE 4/3 700BAR VIT	VITON Seals
990100030	HAND VALVE 4/3 700BAR AVP	Body and valve parst in AVP (ATEX)
990100080	HAND VALVE 4/3 700BAR INOX	Body and valve parts in Stainless steel
990100100	HAND VALVE 4/3 700BAR-C.C.LEV.90-D	Lever rotated 90° to the right
990100110	HAND VALVE 4/3 700BAR-C.C.LEV.90-S	Lever rotated 90° to the left
990100012	HAND VALVE 4/3 700BAR P-T	

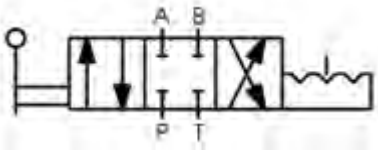

HAND VALVE 1000BAR

4/3 hand valve (4-way-3 positions), manually operated, Cetop3 connection, working pressure 1,000bar

---

Series: System Parts

Product line: Industrial tools, clamping systems, Pumps and Power Units, Filters, Cylinders, Industrial Vehicles, Hydraulic Circuits

- **Body and valve parts entirely in AVP**
- **Manual operation throughwith an ergonomic lever**
- **Lever in galvanized steel**
- **4-way / 3-position valve (A-T-B)**
- **Open center**
- **Compatibility with single and double acting applications**
- **O-Ring seals in NBR 90SH**
- **Different flow configurations**
- **Materials resistant to stress even in harsh working conditions**
- **Anti-corrosion treatments for long durability over time**

Technical features:

Max working pressure (bar):	1000	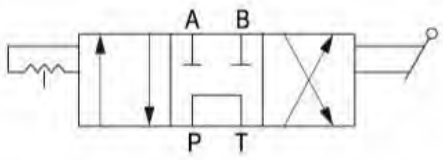
Max oil flow (l/min):	10	
Valve operation:	manual	
Flange:	Cetop 03	
Center:	open	
Seal:	NBR 90SH	
Weight (kg):	0,6	

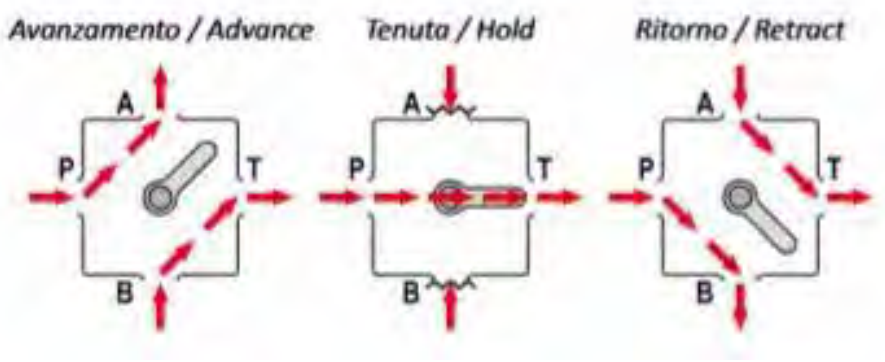

Size:

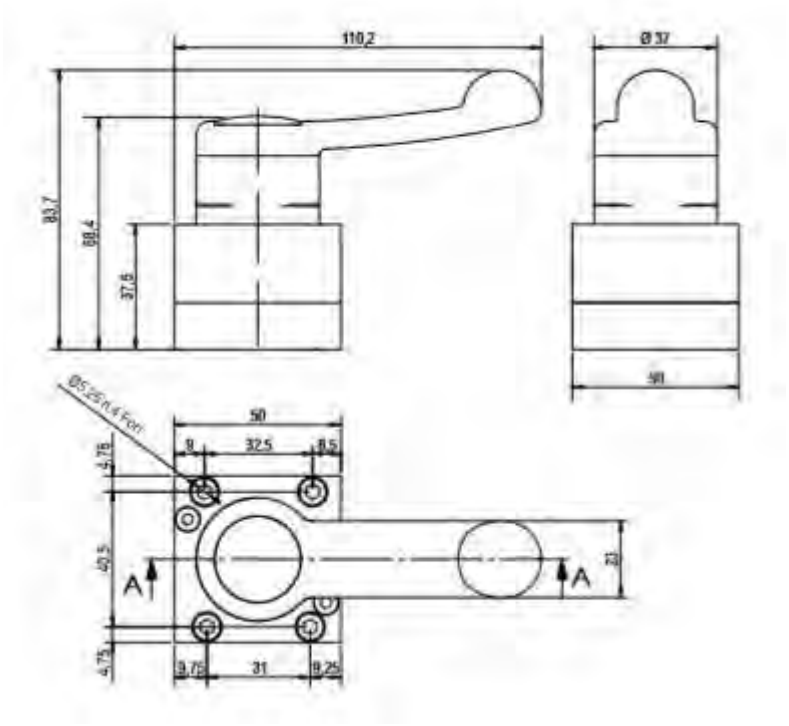

To order:

990100120 HAND VALVE 4/3 1000BAR Body+valve parts in AVP/ steel lever

IN-LINE HAND VALVE 700BAR

In-line hand valve, manually operated, 4-way block, working pressure 700bar

Series: System Parts

Product line: Industrial tools, clamping systems, Pumps and Power Units, Filters, Cylinders, Industrial Vehicles, Hydraulic Circuits

- **Manual operation with 3-position lever (A, T, B)**
- **4-way valve block**
- **Open center**
- **Compatibility with single and double acting applications**
- **O-Ring seals in NBR 90SH**
- **Different flow configurations**
- **Body and valve parts in treated and anodized aluminum**
- **Materials resistant to stress even in heavy working conditions**
- **Anti-corrosion treatments for long durability over time**

Main fields of application:

BELL's in-line hand valve is useful for converting single-acting applications into double-acting. It can be combined with HFP, UP and HP Series pumps and with any other hydraulic application where it is required to divert the flow to one or more applications.

Technical features:

Max working pressure (bar):	700	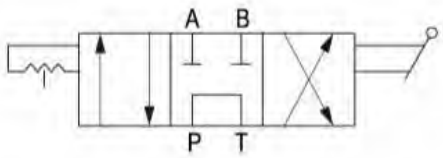
Max oil flow (l/min):	10	
Valve operation:	manual	
Layout	In-line	
Center:	open	
Seals:	NBR 90SH	
Weight (kg):	0,6	

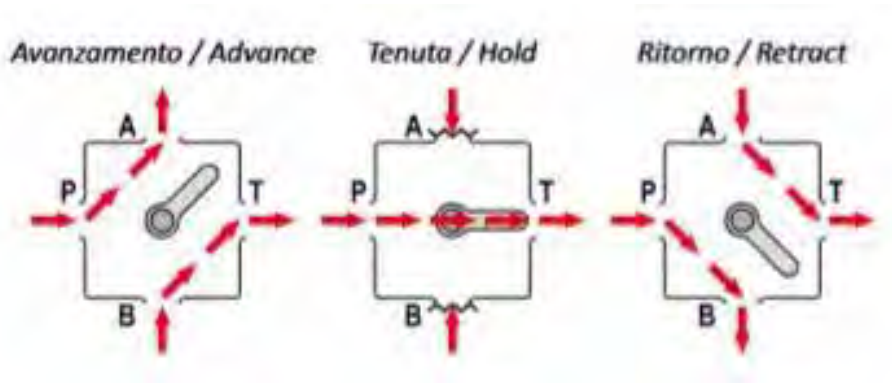

Size:

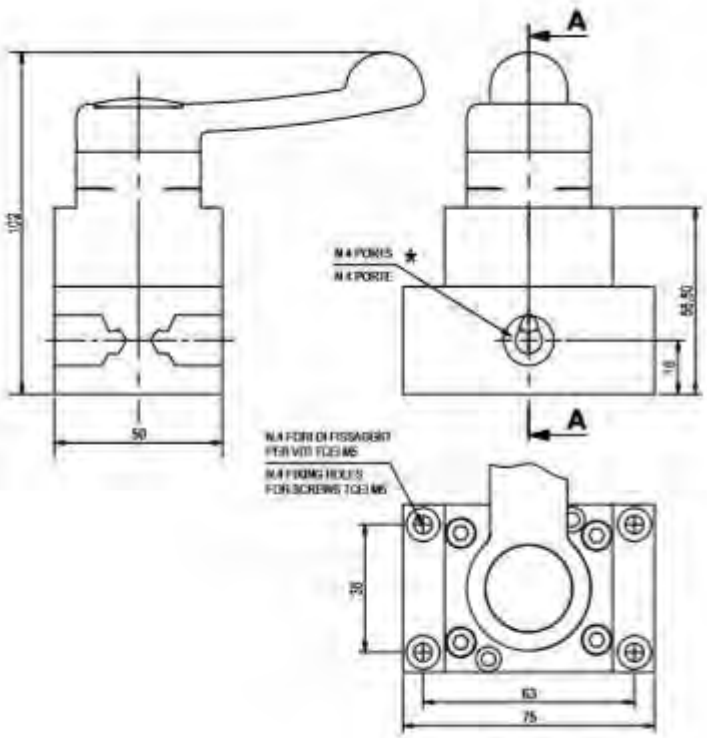

To order:

990100040	HAND VALVE 4/3 700BAR G3/8	Oil ports G3/8”
990100050	HAND VALVE 4/3 700BAR G1/4	Oil ports G1/4”
990100060	HAND VALVE 4/3 700BAR 3/8NPT	Oil ports 3/8”NPT
990100070	HAND VALVE 4/3 700BAR 1/4NPT	Oil ports 1/4”NPT
990100090	HAND VALVE 4/3 700BAR C.C. A&B>T	Center closed (P) / A & B in T

SOLENOID VALVE DSA3-S3/11N

DSA3-S3 / 11N, Directional solenoid valve, directly operated, for plate mounting, Cetop3 connection, operating pressure 350bar, max flow rate 100 l / min

---

Series: System Parts

Product line: Industrial tools, clamping systems, Pumps and Power Units, Filters, Cylinders, Industrial Vehicles, Hydraulic Circuits

- **Complies with ISO 4401 standards (CETOP RP121H)**
- **High resistance cast iron valve body**
- **Large internal ducts which result in minimal pressure drops**
- **Electromagnets with swiveling interchangeable coils**
- **Pipes in oil bath**
- **Solenoids for direct or alternating current power supply**

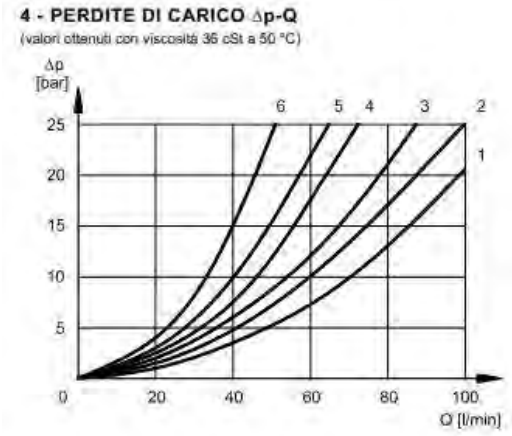

Ref. to curve 3 relating to the DS3 valve

Main fields of application:

The DSA3-S3 / 11N solenoid valve is applicable - as a system part - to the UP series pumps with Cetop3 flanged connections (UPC and UPM), or for any other type of hydraulic application.

Technical features:

Max working pressure (bar):	700	
Max oil flow (l/min):	100	
Valve operation:	electric	
Power source:	alternating / direct current	
Room temperature (°C):	-20 / +50	
Fluid temperature (°C):	-20 / +50	
Viscosity (cSt):	10 / 400	
Optimal viscosity (cSt):	25	
Weight (kg):	2	

Size:

To order: P/N 455250040 SOLENOID DSA3-S3/11N

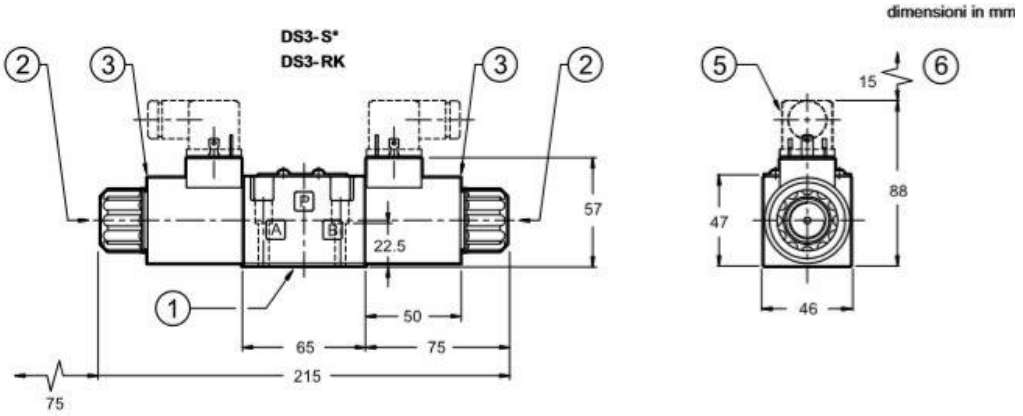

FLOW DIVIDER VALVE KIT

Cartridge flow divider / combiner valve kit, for the synchronized actuation of two cylinders simultaneously with a single device

SerieS: System Parts

Product line: Range of UP Series pumps, industrial tools, lifting bridges, hydraulic applications.

- **Complete kit**
  - **Additional block for flow divider valve**
  - **Flow divider valve VDRF101**
  - **Oil port G1/4**
  - **15µm valve protection filter (optional)**
- **Pump maximum relief valve set at 300bar (valve limit)**

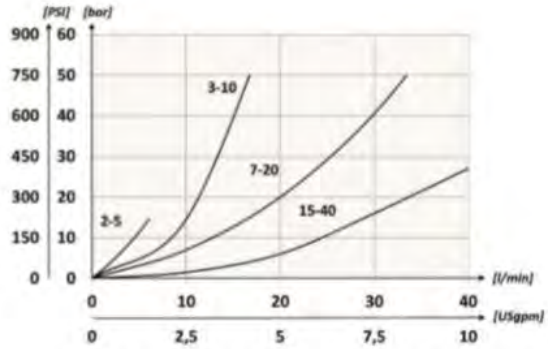

Ref. to curve 2-5 for the VDRF101 valve

Main fields of application:

This flow divide /combiner valve is useful for raising or lowering two single or double acting cylinders simultaneously in a controlled and synchronized way.

For example, in case of a split and separate hydraulic lifter, a single BELL air-hydraulic pump can be used to lift the vehicle up or down safely thanks to the balancing and synchronization of the flow which passes through the VDRF101 valve and is delivered to the two cylinders in equal size and precise way, allowing the operator to work better and safe.

NOTE: this kit must be ordered together with the pump as the main driving block of the pump requires be drilled to size in order to add the additional valve block.

Technical features:

Inlet flow range (l/min):	2-5 (0.5-1.3 USgpm)
Max oil flow (l/min):	40 (10.6 USgpm)
Max output pressure (bar):	350 (5075psi)
Hydraulic oil:	mineral (ISO 6743/4 – DIN 51524)
Viscosity:	15-250 mm2/s (15-250 cSt)
Oil temperature (°C):	-20 +80 (-4°F +176°F)
External temperature (°C):	-20 +50 (-4°F +122°F)
Torque (Nm):	30-33
Cavity:	SAE10/4
Weight (kg):	0,12

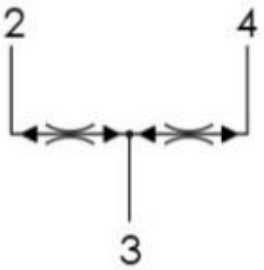

Size:

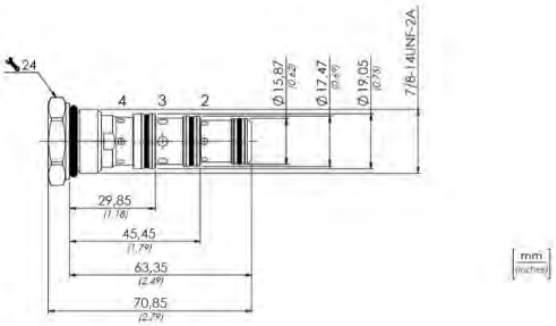

To order: FLOW DIVIDER VALVE KIT UP

FITTINGS AND QUICK COUPLINGS

Air valve fittings, delivery valve fittings, gauge holder fittings, NV quick couplings

Series: System Parts

Product line: Industrial tools, locking systems, pressure gauges, pneumohydraulic pumps, hydraulic pumps, hydraulic systems, equipment, compressors, shipbuilding industry, lifting systems

- **Male and female NV quick couplings with poppet valve. 1/2 "interchangeable thread according to ISO 7241 part A. Flow rate (at 2 bar): 75 l / min**
- **Air fittings and delivery fittings of different threads and connections for HP and UP Series pneumohydraulic pumps**
- **Fittings with pressure gauge holder to check the operating pressure at any time during the use of the equipment**

Main fields of application:
The fittings in our range of system parts are mostly related to the installation on our products, especially onto the HP and UP Series pumps, but they can be also onto many other applications, even different from our air-hydraulic pumps.

The quick couplings can quickly connect and disconnect hydraulic equipments from the circuit ensuring the absence of leaks and withstanding high pressures and temperatures.

Wide range of applications where the use of quick couplings can really make a difference.

Industrial sector, naval sector, high pressure tools, hydraulic tensioners, lifting systems, special vehicles.

To order:

P/N	Compatibility	Oil port:
Air fittings:		
128690010	HP Series	G 1/4
128690090	HP Series	1/4NPTF
128690040	UP Series	G1/4"
128690070	UP Series	1/4-18 NPTF
Oil fittings:		
128570021	HP Series	1/4G
128570120	HP Series	7/16-20UNF
128570010	HP Series	G3/8
128570020	HP Series	3/8NPT
128570090	HP Series	1/4 BSPP
128570070	HP Series	1/4"GAS 4way
128570060	HP Series	3/8"GAS conical
999990665	HP Series	G1/4” + gauge
128690060	HP Series	Pressure gauge adapter
128630021	HP Series	Straight (not orienting)
Quick couplers:		
913251030	Female-NV	1/2"GAS
913251010	Female -NV	1/4" GAS
913250055	Female	1/4"NPTF (PVV)
913250025	Female	3/8"NPTF (PVV)
913251040	Male-NV	1/2" GAS
913251020	Male-NV	1/4" GAS
913250015	Male	3/8" NPTF (PVV)

Synthetic and biodegradable hydraulic oils

(introduction)

WE RECOMMEND SHELL TELLUS OIL FOR ALL HYDRAULIC AND FLUID POWER TRANSMISSION SYSTEMS SUBJECT TO LARGE VARIATIONS IN TEMPERATURE OR WHERE A LIMITED VISCOSITY CHANGE IS REQUIRED WITH VARYING TEMPERATURE

AS AN ALTERNATIVE, BIODEGRADABLE KAJO HEES OIL WHEREVER THERE IS THE RISK THAT ANY LEAKAGE OF HYDRAULIC FLUID MAY COME IN CONTACT WITH UNDERGROUND OR WASTEWATER

SHELL TELLUS T22
Advanced, energy efficient synthetic hydraulic fluid, viscosity grade 22

SHELL TELLUS T32
Advanced, energy efficient synthetic hydraulic fluid, viscosity grade 32

KAJO HEES 32
High performance biodegradable synthetic hydraulic oil, viscosity grade 32

All BELL products are designed and manufactured within BELL SRL in via F. De Pisis, 5 - 42124 Reggio Emilia (RE) - Italy, according to the Quality Standards that distinguish the MADE IN ITALY from the Rest of the World.

SHELL TELLUS T

Advanced, energy-efficient synthetic hydraulic fluid for mobile and stationary applications made with gas-to-liquid (GTL) technology. Meet and pass approvals from leading OEM manufacturers.

Series: System Parts

Product line: Industrial tools, clamping systems, Pumps and Power Units, Filters, Cylinders, Industrial Vehicles, Hydraulic Circuits

- **Limited viscosity variation with temperature**
- **High cut resistance**
- **Outstanding anti-wear performance**
- **Excellent filterability**
- **Resistance to oxidation**
- **Corrosion protection**
- **Rapid air release and antifoam properties**
- **Meets the requirements of ISO 11158 type HV**
- **CE classification:**
  - **not dangerous**
  - **non-flammable, but it burns**
  - **not harmful to the environment**

Main fields of application:

Hydraulic and fluid power transmission systems subject to wide variations in temperature or where a limited change in viscosity is required as the temperature varies.

Some critical hydraulic systems can only tolerate small changes in viscosity as the temperature changes if efficiency and responsiveness are to be maintained. Hydraulic oils such as Shell Tellus Oil T which offer multigrade viscosity characteristics can be advantageously employed in such circumstances.

Technical features:

	SHELL TELLUS T22	**SHELL TELLUS T32**
Viscosity (V):	22	32
Cinematic viscosity:	22 mm2 / s a 40 ° C	32 mm2/s at 40ºC 6.4 mm2/s at 100ºC
ISO:	HV	HV
PH:	not applicable	not applicable
Initial boiling point:	over 280°C	over 280°C
Density:	866 kg / m3 a 15ºC	868 kg / m3 a 15ºC
Flash point:	204ºC. (PMCC).	160ºC. (PMCC).
Self-ignition temperature:	over 320°C	over 320°C
Pour point		-45°C

To order:

P/N K91301001 1L OIL TANK

P/N K91301005 5L OIL TANK

KAJO BIO-HYDRAULIKOL HEES 32
BIODEGRADABLE HYDRAULIC OIL

KAJO HEES 32

High performance biodegradable synthetic hydraulic oil
Meet the requirements of EU Ecolabel, Blaue Engel
Bosch Rexroth Group approved - Made in Germany

SerieS: System Components

Product line: Industrial tools, clamping systems, Pumps and Power Units, Filters, Cylinders, Industrial Vehicles, Hydraulic Circuits

- **Based on selected and easily biodegradable synthetic esters**
- **Particularly powerful and environmentally friendly combination of additives**
- **Zinc free**
- **Excellent stability to oxidation, corrosion and high loads**
- **Good low temperature properties**
- **Meets VDMA 24568 and ISO 15380 requirements**
- **“Blauer Engel” environmental label according to RAL-UZ 178**
- **European Union Quality Label: high percentage of renewable raw materials**
- **Approved by SP Technical Research Institute, Sweden Standard 15 54 34**

Main fields of applications:

KAJO-BIO-Hydrauliköl HEES 32 is used wherever there is a risk that hydraulic fluid leaks may come into contact with groundwater or wastewater. By this we mean, for example, equipment that works in purification and water protection areas or in the surface water sector, such as:

• Dredges and crane pontoons • Hydraulic blocking and river barriers • Tunnels and pipe pushers • Hydraulic power packs in woods and fields • Earth moving machines in water • Forestry machines

	KAJO HEES 32
Degree of viscosity (V):	32 ISO VG DIN 51 519
Kinematic viscosity:	32 mm2/s at 40ºC. DIN ISO 3104 7,25 mm2/s at 100ºC. DIN ISO 3104
Boiling point Initial:	over 280°C
Density:	868 kg / m3 a 15ºC
Flash point:	250ºC. (PMCC).
Percentage of renewable raw materials	80 % ASTM D 6866
Pour point	30°C ASTM D 97

To order:

P/N K91301002 OIL TANK 1 L

P/N K91301006 OIL TANK 5 L

Hydraulic filters for high and very high pressures (introduction)

BELL IN-LINE FILTERS ENSURE HIGH PROTECTION TO THE MOST DELICATE COMPONENTS OF THE HYDRAULIC SYSTEM

Connected to the delivery or return line of the hydraulic system, they can retain particles, from the finest to the coarsest and particularly harmful impurities with a filtering degree from 10 to 80/100 µm.

Description:

BELL in-line filters are normally added to the traditional ones, in suction or discharge, as an additional fluid filtering barrier to protect the inlet of directional valves, flow control valves, and all those system components that require a high degree of absolute filtering.

Main advantages:

- Dimensioni compatte ed ingombri estremamente contenuti
- Leggerissimi (peso minimo gr. 250)
- Massima robustezza ed efficienza
- Elevate prestazioni di filtraggio e resistenza
- Componenti del filtro intercambiabili
- Cartuccia filtrante, sostituibile o lavabile, in bronzo sinterizzato con forma conica per resistere anche alle altissime pressioni senza collassare (fino a 700bar)
- Reversibilità del filtro per garantire un filtraggio in entrambe le direzioni del flusso
- Facilità di installazione
- Tappo di ispezione della cartuccia filtrante per una manutenzione ancora più rapida ed immediata (filtro a 90°)

Main features:

- High operating pressures up to 700bar
- Large flow rates (nominal flow up to 100 l / min)
- Standard filtering range 10, 25, 40, 60 and 80/100 µm
- Filter body in treated material for maximum resistance to external agents
    - Aluminum, steel & stainless steel
- Standard and VITON seals for mineral oils, emulsions and particularly aggressive synthetic fluids
- Oil ports with universal BSP and NPTF threads

Main fields of application:

- Agricultural and Forestry: agricultural machinery, tractors, irrigation systems, ...
- Earth: cranes, excavators, elevators, ...
- Automotive: workshops, lifting bridges, hydraulic trolleys, jacks, jacks, diesel pumps,….
- Industrial: large hydraulic systems, generators, intensifiers, multipliers, ...
- Marine: turbines, large hydraulic systems, offshore,….
- Wind
- Transport

350 SERIES

500 SERIES

700 SERIES

All BELL products are designed and manufactured within BELL SRL in via F. De Pisis, 5 - 42124 Reggio Emilia (RE) - Italy, according to the Quality Standards that distinguish the MADE IN ITALY from the Rest of the World.

SERIE350

Hydraulic filters, high pressure, in line, in anodized aluminum and stainless steel, maximum flow rate 100 l / min, maximum pressure 350bar

---

Series: 350 In-line

Product line: Agricultural and Forestry, Earthmoving, Automotive, Industrial, Marine, Wind, Transport

- **In-line operation**
- **Compact and lightweight**
- **Maximum strength and efficiency**
- **High filtering performance and resistance**
- **Interchangeable filter parts**
- **Replaceable or washable filter element in sintered bronze**
- **Reversible filter to ensure filtration in both directions of the flow**
- **Easy install**

Technical features:

Max working pressure (bar):	350
Max oil flow nominal (l/min):	100
Filtration (µm):	10-25-40-60-80/100
Filter body:	Anodized aluminum / INOX AISI 316L
Filtering element:	Sintered bronze
Seal:	NBR / VITON
Ports:	BSP / NPTF
Threads:	M18/10 - M18/25 – 9/16UNF - 1/2 “ - 1/4 “ – 3/8”
Weight (kg):	0,24 (alluminio) / 0,60 (inox)

Size:

IN-LINE FILTER

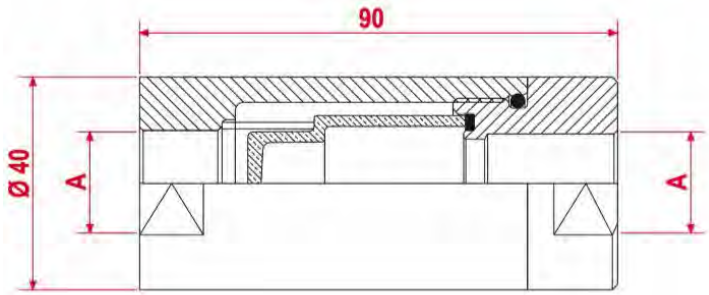

FILTERING ELEMENT

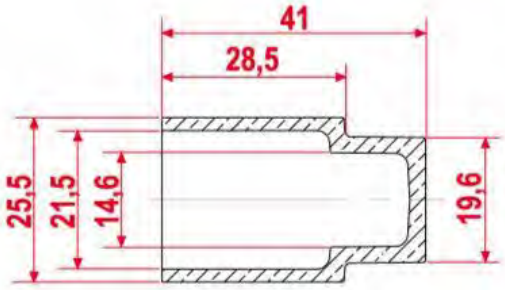

To order:

P/N	DESCRIPTION	THREAD	FILTERING	BODY	FLOW	TYPE
924001410	IL 14/10	1 / 4” BSP	10 µ	ALU	→	NBR 70SH
924001425	IL 14/25	1 / 4” BSP	25 µ	ALU	→	NBR 70SH
924001440	IL 14/40	1 / 4” BSP	40 µ	ALU	→	NBR 70SH
924001460	IL 14/60	1 / 4” BSP	60 µ	ALU	→	NBR 70SH
924003810	IL 38/10	3 / 8” BSP	10 µ	ALU	→	NBR 70SH
924003825	IL 38/25	3 / 8” BSP	25 µ	ALU	→	NBR 70SH
924003840	IL 38/40	3 / 8” BSP	40 µ	ALU	→	NBR 70SH
924003860	IL 38/60	3 / 8” BSP	60 µ	ALU	→	NBR 70SH
924003880	IL 38/80	3 / 8” BSP	80 µ	ALU	→	NBR 70SH
924001810	IL 18/10	M18X1,5	10 µ	ALU	→	NBR 70SH
924001825	IL 18/25	M18X1,5	25 µ	ALU	→	NBR 70SH
924001840	IL 18/40	M18X1,5	40 µ	ALU	→	NBR 70SH
924001860	IL 18/60	M18X1,5	60 µ	ALU	→	NBR 70SH
924001880	IL 18/80	M18X1,5	80 µ	ALU	→	NBR 70SH
924001210	IL 12/10	1 / 2” BSP	10 µ	ALU	→	NBR 70SH
924001225	IL 12/25	1 / 2” BSP	25 µ	ALU	→	NBR 70SH
924001240	IL 12/40	1 / 2” BSP	40 µ	ALU	→	NBR 70SH
924001260	IL 12/60	1 / 2” BSP	60 µ	ALU	→	NBR 70SH
924001280	IL 12/80	1 / 2” BSP	80 µ	ALU	→	NBR 70SH
924001412	IL 14/10	1 / 4” BSP	10 µ	ALU	→	VITON
924001427	IL 14/25	1 / 4” BSP	25 µ	ALU	→	VITON
924001442	IL 14/40	1 / 4” BSP	40 µ	ALU	→	VITON
924001462	IL 14/60	1 / 4” BSP	60 µ	ALU	→	VITON
924001482	IL 14/80	1 / 4” BSP	80 µ	ALU	→	VITON
924003812	IL 38/10	3 / 8” BSP	10 µ	ALU	→	VITON
924003827	IL 38/25	3 / 8” BSP	25 µ	ALU	→	VITON
924003842	IL 38/40	3 / 8” BSP	40 µ	ALU	→	VITON
924003862	IL 38/60	3 / 8” BSP	60 µ	ALU	→	VITON
924003882	IL 38/80	3 / 8” BSP	80 µ	ALU	→	VITON
924001812	IL 18/10	M18X1,5	10 µ	ALU	→	VITON
924001827	IL 18/25	M18X1,5	25 µ	ALU	→	VITON
924001842	IL 18/40	M18X1,5	40 µ	ALU	→	VITON
924001862	IL 18/60	M18X1,5	60 µ	ALU	→	VITON
924001882	IL 18/80	M18X1,5	80 µ	ALU	→	VITON
924001212	IL 12/10	1 / 2” BSP	10 µ	ALU	→	VITON
924001227	IL 12/25	1 / 2” BSP	25 µ	ALU	→	VITON

P/N	DESCRIPTION	THREAD	FILTERING	BODY	FLOW	TYPE
924001242	IL 12/40	1 / 2” BSP	40 µ	ALU	→	VITON
924001262	IL 12/60	1 / 2” BSP	60 µ	ALU	→	VITON
924001282	IL 12/80	1 / 2” BSP	80 µ	ALU	→	VITON
924001411	IL-R 14/10	1 / 4” BSP	10 µ	ALU	↔	NBR 70SH
924001426	IL-R 14/25	1 / 4” BSP	25 µ	ALU	↔	NBR 70SH
924001441	IL-R 14/40	1 / 4” BSP	40 µ	ALU	↔	NBR 70SH
924001461	IL-R 14/60	1 / 4” BSP	60 µ	ALU	↔	NBR 70SH
924001481	IL-R 14/80	1 / 4” BSP	80 µ	ALU	↔	NBR 70SH
924003811	IL-R 38/10	3 / 8” BSP	10 µ	ALU	↔	NBR 70SH
924003826	IL-R 38/25	3 / 8” BSP	25 µ	ALU	↔	NBR 70SH
924003841	IL-R 38/40	3 / 8” BSP	40 µ	ALU	↔	NBR 70SH
924003861	IL-R 38/60	3 / 8” BSP	60 µ	ALU	↔	NBR 70SH
924003881	IL-R 38/80	3 / 8” BSP	80 µ	ALU	↔	NBR 70SH
924001811	IL-R 18/10	M18X1,5	10 µ	ALU	↔	NBR 70SH
924001826	IL-R 18/25	M18X1,5	25 µ	ALU	↔	NBR 70SH
924001841	IL-R 18/40	M18X1,5	40 µ	ALU	↔	NBR 70SH
924001861	IL-R 18/60	M18X1,5	60 µ	ALU	↔	NBR 70SH
924001881	IL-R 18/80	M18X1,5	80 µ	ALU	↔	NBR 70SH
924001211	IL-R 12/10	1 / 2” BSP	25 µ	ALU	↔	NBR 70SH
924001226	IL-R 12/25	1 / 2” BSP	25 µ	ALU	↔	NBR 70SH
924001241	IL-R 12/40	1 / 2” BSP	40 µ	ALU	↔	NBR 70SH
924001261	IL-R 12/60	1 / 2” BSP	60 µ	ALU	↔	NBR 70SH
924001281	IL-R 12/80	1 / 2” BSP	80 µ	ALU	↔	NBR 70SH
924001413	IL-R 14/10	1 / 4” BSP	10 µ	ALU	↔	VITON
924001429	IL-R 14/25	1 / 4” BSP	25 µ	ALU	↔	VITON
924001443	IL-R 14/40	1 / 4” BSP	40 µ	ALU	↔	VITON
924001463	IL-R 14/60	1 / 4” BSP	60 µ	ALU	↔	VITON
924001483	IL-R 14/80	1 / 4” BSP	80 µ	ALU	↔	VITON
924003813	IL-R 38/10	3 / 8” BSP	10 µ	ALU	↔	VITON
924003829	IL-R 38/25	3 / 8” BSP	25 µ	ALU	↔	VITON
924003843	IL-R 38/40	3 / 8” BSP	40 µ	ALU	↔	VITON
924003863	IL-R 38/60	3 / 8” BSP	60 µ	ALU	↔	VITON
924003883	IL-R 38/80	3 / 8” BSP	80 µ	ALU	↔	VITON
924001813	IL-R 18/10	M18X1,5	10 µ	ALU	↔	VITON
924001829	IL-R 18/25	M18X1,5	25 µ	ALU	↔	VITON
924001843	IL-R 18/40	M18X1,5	40 µ	ALU	↔	VITON
924001863	IL-R 18/60	M18X1,5	60 µ	ALU	↔	VITON

P/N	DESCRIPTION	THREAD	FILTERING	BODY	FLOW	TYPE
924001883	IL-R 18/80	M18X1,5	80 µ	ALU	↔	VITON
924001213	IL-R 12/10	1 / 2” BSP	25 µ	ALU	↔	VITON
924001229	IL-R 12/25	1 / 2” BSP	25 µ	ALU	↔	VITON
924001243	IL-R 12/40	1 / 2” BSP	40 µ	ALU	↔	VITON
924001263	IL-R 12/60	1 / 2” BSP	60 µ	ALU	↔	VITON
924001283	IL-R 12/80	1 / 2” BSP	80 µ	ALU	↔	VITON
924001416	IL 14/10	1 / 4” BSP	10 µ	ALU	→	NBR 90SH
924001431	IL 14/25	1 / 4” BSP	25 µ	ALU	→	NBR 90SH
924001446	IL 14/40	1 / 4” BSP	40 µ	ALU	→	NBR 90SH
924001466	IL 14/60	1 / 4” BSP	60 µ	ALU	→	NBR 90SH
924001486	IL 14/80	1 / 4” BSP	80 µ	ALU	→	NBR 90SH
924003816	IL 38/10	3 / 8” BSP	10 µ	ALU	→	NBR 90SH
924003831	IL 38/25	3 / 8” BSP	25 µ	ALU	→	NBR 90SH
924003846	IL 38/40	3 / 8” BSP	40 µ	ALU	→	NBR 90SH
924003866	IL 38/60	3 / 8” BSP	60 µ	ALU	→	NBR 90SH
924003886	IL 38/80	3 / 8” BSP	80 µ	ALU	→	NBR 90SH
924001816	IL 18/10	M18X1,5	10 µ	ALU	→	NBR 90SH
924001831	IL 18/25	M18X1,5	25 µ	ALU	→	NBR 90SH
924001846	IL 18/40	M18X1,5	40 µ	ALU	→	NBR 90SH
924001866	IL 18/60	M18X1,5	60 µ	ALU	→	NBR 90SH
924001886	IL 18/80	M18X1,5	80 µ	ALU	→	NBR 90SH
924001216	IL 12/10	1 / 2” BSP	10 µ	ALU	→	NBR 90SH
924001231	IL 12/25	1 / 2” BSP	25 µ	ALU	→	NBR 90SH
924001247	IL 12/40	1 / 2” BSP	40 µ	ALU	→	NBR 90SH
924001267	IL 12/60	1 / 2” BSP	60 µ	ALU	→	NBR 90SH
924001287	IL 12/80	1 / 2” BSP	80 µ	ALU	→	NBR 90SH
924001417	IL-R 14/10	1 / 4” BSP	10 µ	ALU	↔	NBR 90SH
924001432	IL-R 14/25	1 / 4” BSP	25 µ	ALU	↔	NBR 90SH
924001447	IL-R 14/40	1 / 4” BSP	40 µ	ALU	↔	NBR 90SH
924001467	IL-R 14/60	1 / 4” BSP	60 µ	ALU	↔	NBR 90SH
924001487	IL-R 14/80	1 / 4” BSP	80 µ	ALU	↔	NBR 90SH
924003817	IL-R 38/10	3 / 8” BSP	10 µ	ALU	↔	NBR 90SH
924003832	IL-R 38/25	3 / 8” BSP	25 µ	ALU	↔	NBR 90SH
924003847	IL-R 38/40	3 / 8” BSP	40 µ	ALU	↔	NBR 90SH
924003867	IL-R 38/60	3 / 8” BSP	60 µ	ALU	↔	NBR 90SH
924003887	IL-R 38/80	3 / 8” BSP	80 µ	ALU	↔	NBR 90SH
924001817	IL-R 18/10	M18X1,5	10 µ	ALU	↔	NBR 90SH

P/N	DESCRIPTION	THREAD	FILTERING	BODY	FLOW	TYPE
924001832	IL-R 18/25	M18X1,5	25 µ	ALU	↔	NBR 90SH
924001847	IL-R 18/40	M18X1,5	40 µ	ALU	↔	NBR 90SH
924001867	IL-R 18/60	M18X1,5	60 µ	ALU	↔	NBR 90SH
924001887	IL-R 18/80	M18X1,5	80 µ	ALU	↔	NBR 90SH
924001217	IL-R 12/10	1 / 2” BSP	25 µ	ALU	↔	NBR 90SH
924001232	IL-R 12/25	1 / 2” BSP	25 µ	ALU	↔	NBR 90SH
924001247	IL-R 12/40	1 / 2” BSP	40 µ	ALU	↔	NBR 90SH
924001267	IL-R 12/60	1 / 2” BSP	60 µ	ALU	↔	NBR 90SH
924001287	IL-R 12/80	1 / 2” BSP	80 µ	ALU	↔	NBR 90SH
924011410	IL 14/10	1 / 4” BSP	10 µ	INOX 316L	→	NBR 70SH
924011425	IL 14/25	1 / 4” BSP	25 µ	INOX 316L	→	NBR 70SH
924011440	IL 14/40	1 / 4” BSP	40 µ	INOX 316L	→	NBR 70SH
924011460	IL 14/60	1 / 4” BSP	60 µ	INOX 316L	→	NBR 70SH
924011480	IL 14/80	1 / 4” BSP	80 µ	INOX 316L	→	NBR 70SH
924013810	IL 38/10	3 / 8” BSP	10 µ	INOX 316L	→	NBR 70SH
924013825	IL 38/25	3 / 8” BSP	25 µ	INOX 316L	→	NBR 70SH
924013840	IL 38/40	3 / 8” BSP	40 µ	INOX 316L	→	NBR 70SH
924013860	IL 38/60	3 / 8” BSP	60 µ	INOX 316L	→	NBR 70SH
924013880	IL 38/80	3 / 8” BSP	80 µ	INOX 316L	→	NBR 70SH
924011810	IL 18/10	M18X1,5	10 µ	INOX 316L	→	NBR 70SH
924011825	IL 18/25	M18X1,5	25 µ	INOX 316L	→	NBR 70SH
924011840	IL 18/40	M18X1,5	40 µ	INOX 316L	→	NBR 70SH
924011860	IL 18/60	M18X1,5	60 µ	INOX 316L	→	NBR 70SH
924011880	IL 18/80	M18X1,5	80 µ	INOX 316L	→	NBR 70SH
924011210	IL 12/10	1 / 2” BSP	10 µ	INOX 316L	→	NBR 70SH
924011225	IL 12/25	1 / 2” BSP	25 µ	INOX 316L	→	NBR 70SH
924011240	IL 12/40	1 / 2” BSP	40 µ	INOX 316L	→	NBR 70SH
924011260	IL 12/60	1 / 2” BSP	60 µ	INOX 316L	→	NBR 70SH
924011280	IL 12/80	1 / 2” BSP	80 µ	INOX 316L	→	NBR 70SH
924011411	IL-R 14/10	1 / 4” BSP	10 µ	INOX 316L	↔	NBR 70SH
924011426	IL-R 14/25	1 / 4” BSP	25 µ	INOX 316L	↔	NBR 70SH
924011441	IL-R 14/40	1 / 4” BSP	40 µ	INOX 316L	↔	NBR 70SH
924011461	IL-R 14/60	1 / 4” BSP	60 µ	INOX 316L	↔	NBR 70SH
924011481	IL-R 14/80	1 / 4” BSP	80 µ	INOX 316L	↔	NBR 70SH
924013811	IL-R 38/10	3 / 8” BSP	10 µ	INOX 316L	↔	NBR 70SH
924013826	IL-R 38/25	3 / 8” BSP	25 µ	INOX 316L	↔	NBR 70SH
924013841	IL-R 38/40	3 / 8” BSP	40 µ	INOX 316L	↔	NBR 70SH

P/N	DESCRIPTION	THREAD	FILTERING	BODY	FLOW	TYPE
924013861	IL-R 38/60	3 / 8” BSP	60 µ	INOX 316L	↔	NBR 70SH
924013881	IL-R 38/80	3 / 8” BSP	80 µ	INOX 316L	↔	NBR 70SH
924011811	IL-R 18/10	M18X1,5	10 µ	INOX 316L	↔	NBR 70SH
924011826	IL-R 18/25	M18X1,5	25 µ	INOX 316L	↔	NBR 70SH
924011841	IL-R 18/40	M18X1,5	40 µ	INOX 316L	↔	NBR 70SH
924011861	IL-R 18/60	M18X1,5	60 µ	INOX 316L	↔	NBR 70SH
924011881	IL-R 18/80	M18X1,5	80 µ	INOX 316L	↔	NBR 70SH
924011211	IL-R 12/10	1 / 2” BSP	10 µ	INOX 316L	↔	NBR 70SH
924011226	IL-R 12/25	1 / 2” BSP	25 µ	INOX 316L	↔	NBR 70SH
924011241	IL-R 12/40	1 / 2” BSP	40 µ	INOX 316L	↔	NBR 70SH
924011261	IL-R 12/60	1 / 2” BSP	60 µ	INOX 316L	↔	NBR 70SH
924011281	IL-R 12/80	1 / 2” BSP	80 µ	INOX 316L	↔	NBR 70SH
924011412	IL 14/10	1 / 4” BSP	10 µ	INOX 316L	→	VITON
924011427	IL 14/25	1 / 4” BSP	25 µ	INOX 316L	→	VITON
924011442	IL 14/40	1 / 4” BSP	40 µ	INOX 316L	→	VITON
924011462	IL 14/60	1 / 4” BSP	60 µ	INOX 316L	→	VITON
924011482	IL 14/80	1 / 4” BSP	80 µ	INOX 316L	→	VITON
924013812	IL 38/10	3 / 8” BSP	10 µ	INOX 316L	→	VITON
924013827	IL 38/25	3 / 8” BSP	25 µ	INOX 316L	→	VITON
924013842	IL 38/40	3 / 8” BSP	40 µ	INOX 316L	→	VITON
924013862	IL 38/60	3 / 8” BSP	60 µ	INOX 316L	→	VITON
924013882	IL 38/80	3 / 8” BSP	80 µ	INOX 316L	→	VITON
924011812	IL 18/10	M18X1,5	10 µ	INOX 316L	→	VITON
924011827	IL 18/25	M18X1,5	25 µ	INOX 316L	→	VITON
924011842	IL 18/40	M18X1,5	40 µ	INOX 316L	→	VITON
924011862	IL 18/60	M18X1,5	60 µ	INOX 316L	→	VITON
924011882	IL 18/80	M18X1,5	80 µ	INOX 316L	→	VITON
924011212	IL 12/10	1 / 2” BSP	10 µ	INOX 316L	→	VITON
924011227	IL 12/25	1 / 2” BSP	25 µ	INOX 316L	→	VITON
924011242	IL 12/40	1 / 2” BSP	40 µ	INOX 316L	→	VITON
924011262	IL 12/60	1 / 2” BSP	60 µ	INOX 316L	→	VITON
924011282	IL 12/80	1 / 2” BSP	80 µ	INOX 316L	→	VITON
924011413	IL-R 14/10	1 / 4” BSP	10 µ	INOX 316L	↔	VITON
924011429	IL-R 14/25	1 / 4” BSP	25 µ	INOX 316L	↔	VITON
924011443	IL-R 14/40	1 / 4” BSP	40 µ	INOX 316L	↔	VITON
924011463	IL-R 14/60	1 / 4” BSP	60 µ	INOX 316L	↔	VITON
924011483	IL-R 14/80	1 / 4” BSP	80 µ	INOX 316L	↔	VITON

P/N	DESCRIPTION	THREAD	FILTERING	BODY	FLOW	TYPE
924013813	IL-R 38/10	3 / 8” BSP	10 µ	INOX 316L	↔	VITON
924013829	IL-R 38/25	3 / 8” BSP	25 µ	INOX 316L	↔	VITON
924013843	IL-R 38/40	3 / 8” BSP	40 µ	INOX 316L	↔	VITON
924013863	IL-R 38/60	3 / 8” BSP	60 µ	INOX 316L	↔	VITON
924013883	IL-R 38/80	3 / 8” BSP	80 µ	INOX 316L	↔	VITON
924011813	IL-R 18/10	M18X1,5	10 µ	INOX 316L	↔	VITON
924011829	IL-R 18/25	M18X1,5	25 µ	INOX 316L	↔	VITON
924011843	IL-R 18/40	M18X1,5	40 µ	INOX 316L	↔	VITON
924011863	IL-R 18/60	M18X1,5	60 µ	INOX 316L	↔	VITON
924011883	IL-R 18/80	M18X1,5	80 µ	INOX 316L	↔	VITON

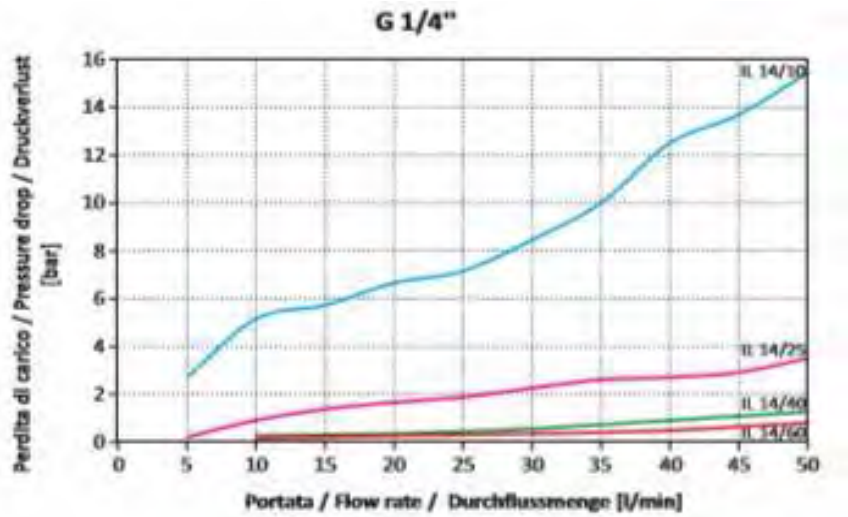

Filter marking:

The in-line filters of the 350 Series, as well as all BELL filters, are marked with type, brand, connection, production date and operator. Customized marking on demand.

SERIE350

Filtri oleodinamici, alta pressione, a 90°, in alluminio anodizzato e INOX, portata massima 100 l/min, pressione massima 350bar

Serie: 350 90° T-Filter

Product line: Agricultural and Forestry, Earthmoving, Automotive, Industrial, Marine, Wind, Transport

- **90 ° in-line operation (lateral connection on the filter body)**
- **Compact and lightweight**
- **Maximum strength and efficiency**
- **High filtering performance and resistance**
- **Interchangeable filter parts**
- **Replaceable or washable filter cartridge in sintered bronze**
- **Reversible filter to ensure filtering in both directions of the flow**
- **Easy install**
- **Inspection cap of the filter cartridge for even faster and more immediate maintenance**

Technical features:

Max working pressure (bar):	350
Max oil flow (nominal) (l/min):	100
Filtering range (µm):	10-25-40-60-80/100
Filter body:	Anodized aluminum / INOX AISI 316L
Filtering element:	Sintered bronze
Seals:	NBR / VITON
Oil ports:	BSP / NPTF
Threads:	M18/10 - M18/25 – 9/16UNF - 1/2 “ - 1/4 “ – 3/8”
Weight (kg):	0,24 (aluminum) / 0,60 (inox)

Size:

IN LINE FILTER

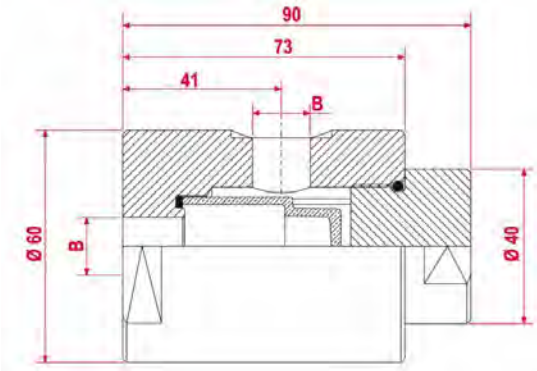

FILTERING ELEMENT

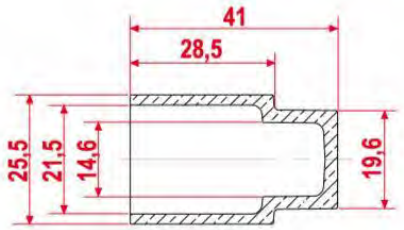

To order:

P/N	DESCRIPTION	THREAD	FILTERING	BODY	FLOW	TYPE
924901410	T 14/10	1 / 4” BSP	10 µ	ALU	→	NBR 70SH
924901425	T 14/25	1 / 4” BSP	25 µ	ALU	→	NBR 70SH
924901440	T 14/40	1 / 4” BSP	40 µ	ALU	→	NBR 70SH
924901460	T 14/60	1 / 4” BSP	60 µ	ALU	→	NBR 70SH
924901480	T 14/80	1 / 4” BSP	80 µ	ALU	→	NBR 70SH
924903810	T 38/10	3 / 8” BSP	10 µ	ALU	→	NBR 70SH
924903825	T 38/25	3 / 8” BSP	25 µ	ALU	→	NBR 70SH
924903840	T 38/40	3 / 8” BSP	40 µ	ALU	→	NBR 70SH
924903860	T 38/60	3 / 8” BSP	60 µ	ALU	→	NBR 70SH
924903880	T 38/80	3 / 8” BSP	80 µ	ALU	→	NBR 70SH
924901810	T 18/10	M18X1,5	10 µ	ALU	→	NBR 70SH
924901825	T 18/25	M18X1,5	25 µ	ALU	→	NBR 70SH
924901840	T 18/40	M18X1,5	40 µ	ALU	→	NBR 70SH
924901860	T 18/60	M18X1,5	60 µ	ALU	→	NBR 70SH
924901880	T 18/80	M18X1,5	80 µ	ALU	→	NBR 70SH
924901413	T 14/10	1 / 4” BSP	10 µ	ALU	→	VITON
924901427	T 14/25	1 / 4” BSP	25 µ	ALU	→	VITON
924901442	T 14/40	1 / 4” BSP	40 µ	ALU	→	VITON
924901462	T 14/60	1 / 4” BSP	60 µ	ALU	→	VITON
924901482	T 14/80	1 / 4” BSP	80 µ	ALU	→	VITON
924903812	T 38/10	3 / 8” BSP	10 µ	ALU	→	VITON
924903827	T 38/25	3 / 8” BSP	25 µ	ALU	→	VITON
924903842	T 38/40	3 / 8” BSP	40 µ	ALU	→	VITON
924903862	T 38/60	3 / 8” BSP	60 µ	ALU	→	VITON
924903882	T 38/80	3 / 8” BSP	80 µ	ALU	→	VITON
924901812	T 18/10	M18X1,5	10 µ	ALU	→	VITON
924901827	T 18/25	M18X1,5	25 µ	ALU	→	VITON
924901842	T 18/40	M18X1,5	40 µ	ALU	→	VITON
924901862	T 18/60	M18X1,5	60 µ	ALU	→	VITON
924901882	T 18/80	M18X1,5	80 µ	ALU	→	VITON
924901411	T-R 14/10	1 / 4” BSP	10 µ	ALU	↔	NBR 70SH
924901426	T-R 14/25	1 / 4” BSP	25 µ	ALU	↔	NBR 70SH
924901441	T-R 14/40	1 / 4” BSP	40 µ	ALU	↔	NBR 70SH
924901461	T-R 14/60	1 / 4” BSP	60 µ	ALU	↔	NBR 70SH
924901481	T-R 14/80	1 / 4” BSP	80 µ	ALU	↔	NBR 70SH
924903811	T-R 38/10	3 / 8” BSP	10 µ	ALU	↔	NBR 70SH

P/N	DESCRIPTION	THREAD	FILTERING	BODY	FLOW	TYPE
924903826	T-R 38/25	3 / 8” BSP	25 µ	ALU	↔	NBR 70SH
924903841	T-R 38/40	3 / 8” BSP	40 µ	ALU	↔	NBR 70SH
924903861	T-R 38/60	3 / 8” BSP	60 µ	ALU	↔	NBR 70SH
924903881	T-R 38/80	3 / 8” BSP	80 µ	ALU	↔	NBR 70SH
924901811	T-R 18/10	M18X1,5	10 µ	ALU	↔	NBR 70SH
924901826	T-R 18/25	M18X1,5	25 µ	ALU	↔	NBR 70SH
924901841	T-R 18/40	M18X1,5	40 µ	ALU	↔	NBR 70SH
924901861	T-R 18/60	M18X1,5	60 µ	ALU	↔	NBR 70SH
924901881	T-R 18/80	M18X1,5	80 µ	ALU	↔	NBR 70SH
924901413	T-R 14/10	1 / 4” BSP	10 µ	ALU	↔	VITON
924901429	T-R 14/25	1 / 4” BSP	25 µ	ALU	↔	VITON
924901443	T-R 14/40	1 / 4” BSP	40 µ	ALU	↔	VITON
924901463	T-R 14/60	1 / 4” BSP	60 µ	ALU	↔	VITON
924901483	T-R 14/80	1 / 4” BSP	80 µ	ALU	↔	VITON
924903813	T-R 38/10	3 / 8” BSP	10 µ	ALU	↔	VITON
924903829	T-R 38/25	3 / 8” BSP	25 µ	ALU	↔	VITON
924903843	T-R 38/40	3 / 8” BSP	40 µ	ALU	↔	VITON
924903863	T-R 38/60	3 / 8” BSP	60 µ	ALU	↔	VITON
924903883	T-R 38/80	3 / 8” BSP	80 µ	ALU	↔	VITON
924901813	T-R 18/10	M18X1,5	10 µ	ALU	↔	VITON
924901829	T-R 18/25	M18X1,5	25 µ	ALU	↔	VITON
924901843	T-R 18/40	M18X1,5	40 µ	ALU	↔	VITON
924901863	T-R 18/60	M18X1,5	60 µ	ALU	↔	VITON
924901883	T-R 18/80	M18X1,5	80 µ	ALU	↔	VITON
924901416	T 14/10	1 / 4” BSP	10 µ	ALU	→	NBR 90SH
924901431	T 14/25	1 / 4” BSP	25 µ	ALU	→	NBR 90SH
924901446	T 14/40	1 / 4” BSP	40 µ	ALU	→	NBR 90SH
924901466	T 14/60	1 / 4” BSP	60 µ	ALU	→	NBR 90SH
924901486	T 14/80	1 / 4” BSP	80 µ	ALU	→	NBR 90SH
924903816	T 38/10	3 / 8” BSP	10 µ	ALU	→	NBR 90SH
924903831	T 38/25	3 / 8” BSP	25 µ	ALU	→	NBR 90SH
924903846	T 38/40	3 / 8” BSP	40 µ	ALU	→	NBR 90SH
924903866	T 38/60	3 / 8” BSP	60 µ	ALU	→	NBR 90SH
924903886	T 38/80	3 / 8” BSP	80 µ	ALU	→	NBR 90SH
924901816	T 18/10	M18X1,5	10 µ	ALU	→	NBR 90SH
924901831	T 18/25	M18X1,5	25 µ	ALU	→	NBR 90SH
924901846	T 18/40	M18X1,5	40 µ	ALU	→	NBR 90SH

P/N	DESCRIPTION	THREAD	FILTERING	BODY	FLOW	TYPE
924901866	T 18/60	M18X1,5	60 µ	ALU	→	NBR 90SH
924901886	T 18/80	M18X1,5	80 µ	ALU	→	NBR 90SH
924901417	T-R 14/10	1 / 4” BSP	10 µ	ALU	↔	NBR 90SH
924901432	T-R 14/25	1 / 4” BSP	25 µ	ALU	↔	NBR 90SH
924901447	T-R 14/40	1 / 4” BSP	40 µ	ALU	↔	NBR 90SH
924901467	T-R 14/60	1 / 4” BSP	60 µ	ALU	↔	NBR 90SH
924901487	T-R 14/80	1 / 4” BSP	80 µ	ALU	↔	NBR 90SH
924903817	T-R 38/10	3 / 8” BSP	10 µ	ALU	↔	NBR 90SH
924903832	T-R 38/25	3 / 8” BSP	25 µ	ALU	↔	NBR 90SH
924903847	T-R 38/40	3 / 8” BSP	40 µ	ALU	↔	NBR 90SH
924903867	T-R 38/60	3 / 8” BSP	60 µ	ALU	↔	NBR 90SH
924903887	T-R 38/80	3 / 8” BSP	80 µ	ALU	↔	NBR 90SH
924901817	T-R 18/10	M18X1,5	10 µ	ALU	↔	NBR 90SH
924901832	T-R 18/25	M18X1,5	25 µ	ALU	↔	NBR 90SH
924901847	T-R 18/40	M18X1,5	40 µ	ALU	↔	NBR 90SH
924901867	T-R 18/60	M18X1,5	60 µ	ALU	↔	NBR 90SH
924901887	T-R 18/80	M18X1,5	80 µ	ALU	↔	NBR 90SH
924911410	T 14/10	1 / 4” BSP	10 µ	INOX 316L	→	NBR 70SH
924911425	T 14/25	1 / 4” BSP	25 µ	INOX 316L	→	NBR 70SH
924911440	T 14/40	1 / 4” BSP	40 µ	INOX 316L	→	NBR 70SH
924911460	T 14/60	1 / 4” BSP	60 µ	INOX 316L	→	NBR 70SH
924911480	T 14/80	1 / 4” BSP	80 µ	INOX 316L	→	NBR 70SH
924913810	T 38/10	3 / 8” BSP	10 µ	INOX 316L	→	NBR 70SH
924913825	T 38/25	3 / 8” BSP	25 µ	INOX 316L	→	NBR 70SH
924913840	T 38/40	3 / 8” BSP	40 µ	INOX 316L	→	NBR 70SH
924913860	T 38/60	3 / 8” BSP	60 µ	INOX 316L	→	NBR 70SH
924913880	T 38/80	3 / 8” BSP	80 µ	INOX 316L	→	NBR 70SH
924911810	T 18/10	M18X1,5	10 µ	INOX 316L	→	NBR 70SH
924911825	T 18/25	M18X1,5	25 µ	INOX 316L	→	NBR 70SH
924911840	T 18/40	M18X1,5	40 µ	INOX 316L	→	NBR 70SH
924911860	T 18/60	M18X1,5	60 µ	INOX 316L	→	NBR 70SH
924911880	T 18/80	M18X1,5	80 µ	INOX 316L	→	NBR 70SH
924911411	T-R 14/10	1 / 4” BSP	10 µ	INOX 316L	↔	NBR 70SH
924911426	T-R 14/25	1 / 4” BSP	25 µ	INOX 316L	↔	NBR 70SH
924911441	T-R 14/40	1 / 4” BSP	40 µ	INOX 316L	↔	NBR 70SH
924911461	T-R 14/60	1 / 4” BSP	60 µ	INOX 316L	↔	NBR 70SH
924911481	T-R 14/80	1 / 4” BSP	80 µ	INOX 316L	↔	NBR 70SH

P/N	DESCRIPTION	THREAD	FILTERING	BODY	FLOW	TYPE
924913811	T-R 38/10	3 / 8” BSP	10 µ	INOX 316L	↔	NBR 70SH
924913826	T-R 38/25	3 / 8” BSP	25 µ	INOX 316L	↔	NBR 70SH
924913841	T-R 38/40	3 / 8” BSP	40 µ	INOX 316L	↔	NBR 70SH
924913861	T-R 38/60	3 / 8” BSP	60 µ	INOX 316L	↔	NBR 70SH
924913881	T-R 38/80	3 / 8” BSP	80 µ	INOX 316L	↔	NBR 70SH
924911811	T-R 18/10	M18X1,5	10 µ	INOX 316L	↔	NBR 70SH
924911826	T-R 18/25	M18X1,5	25 µ	INOX 316L	↔	NBR 70SH
924911841	T-R 18/40	M18X1,5	40 µ	INOX 316L	↔	NBR 70SH
924911861	T-R 18/60	M18X1,5	60 µ	INOX 316L	↔	NBR 70SH
924911881	T-R 18/80	M18X1,5	80 µ	INOX 316L	↔	NBR 70SH
924911412	T 14/10	1 / 4” BSP	10 µ	INOX 316L	→	VITON
924911427	T 14/25	1 / 4” BSP	25 µ	INOX 316L	→	VITON
924911442	T 14/40	1 / 4” BSP	40 µ	INOX 316L	→	VITON
924911462	T 14/60	1 / 4” BSP	60 µ	INOX 316L	→	VITON
924911482	T 14/80	1 / 4” BSP	80 µ	INOX 316L	→	VITON
924913812	T 38/10	3 / 8” BSP	10 µ	INOX 316L	→	VITON
924913827	T 38/25	3 / 8” BSP	25 µ	INOX 316L	→	VITON
924913842	T 38/40	3 / 8” BSP	40 µ	INOX 316L	→	VITON
924913862	T 38/60	3 / 8” BSP	60 µ	INOX 316L	→	VITON
924913882	T 38/80	3 / 8” BSP	80 µ	INOX 316L	→	VITON
924911812	T 18/10	M18X1,5	10 µ	INOX 316L	→	VITON
924911827	T 18/25	M18X1,5	25 µ	INOX 316L	→	VITON
924911842	T 18/40	M18X1,5	40 µ	INOX 316L	→	VITON
924911862	T 18/60	M18X1,5	60 µ	INOX 316L	→	VITON
924911882	T 18/80	M18X1,5	80 µ	INOX 316L	→	VITON
924911413	T-R 14/10	1 / 4” BSP	10 µ	INOX 316L	↔	VITON
924911429	T-R 14/25	1 / 4” BSP	25 µ	INOX 316L	↔	VITON
924911443	T-R 14/40	1 / 4” BSP	40 µ	INOX 316L	↔	VITON
924911463	T-R 14/60	1 / 4” BSP	60 µ	INOX 316L	↔	VITON
924911483	T-R 14/80	1 / 4” BSP	80 µ	INOX 316L	↔	VITON
924913813	T-R 38/10	3 / 8” BSP	10 µ	INOX 316L	↔	VITON
924913829	T-R 38/25	3 / 8” BSP	25 µ	INOX 316L	↔	VITON
924913843	T-R 38/40	3 / 8” BSP	40 µ	INOX 316L	↔	VITON
924913863	T-R 38/60	3 / 8” BSP	60 µ	INOX 316L	↔	VITON
924913883	T-R 38/80	3 / 8” BSP	80 µ	INOX 316L	↔	VITON
924911813	T-R 18/10	M18X1,5	10 µ	INOX 316L	↔	VITON
924911829	T-R 18/25	M18X1,5	25 µ	INOX 316L	↔	VITON

P/N	DESCRIPTION	THREAD	FILTERING	BODY	FLOW	TYPE
924911843	T-R 18/40	M18X1,5	40 µ	INOX 316L	↔	VITON
924911863	T-R 18/60	M18X1,5	60 µ	INOX 316L	↔	VITON
924911883	T-R 18/80	M18X1,5	80 µ	INOX 316L	↔	VITON
924901410	T 14/10	1 / 4” BSP	10 µ	ALU	→	NBR 70SH
924901425	T 14/25	1 / 4” BSP	25 µ	ALU	→	NBR 70SH
924901440	T 14/40	1 / 4” BSP	40 µ	ALU	→	NBR 70SH
924901460	T 14/60	1 / 4” BSP	60 µ	ALU	→	NBR 70SH
924901480	T 14/80	1 / 4” BSP	80 µ	ALU	→	NBR 70SH
924903810	T 38/10	3 / 8” BSP	10 µ	ALU	→	NBR 70SH
924903825	T 38/25	3 / 8” BSP	25 µ	ALU	→	NBR 70SH
924903840	T 38/40	3 / 8” BSP	40 µ	ALU	→	NBR 70SH
924903860	T 38/60	3 / 8” BSP	60 µ	ALU	→	NBR 70SH
924903880	T 38/80	3 / 8” BSP	80 µ	ALU	→	NBR 70SH
924901810	T 18/10	M18X1,5	10 µ	ALU	→	NBR 70SH
924901825	T 18/25	M18X1,5	25 µ	ALU	→	NBR 70SH
924901840	T 18/40	M18X1,5	40 µ	ALU	→	NBR 70SH
924901860	T 18/60	M18X1,5	60 µ	ALU	→	NBR 70SH
924901880	T 18/80	M18X1,5	80 µ	ALU	→	NBR 70SH
924901413	T 14/10	1 / 4” BSP	10 µ	ALU	→	VITON
924901427	T 14/25	1 / 4” BSP	25 µ	ALU	→	VITON
924901442	T 14/40	1 / 4” BSP	40 µ	ALU	→	VITON
924901462	T 14/60	1 / 4” BSP	60 µ	ALU	→	VITON
924901482	T 14/80	1 / 4” BSP	80 µ	ALU	→	VITON
924903812	T 38/10	3 / 8” BSP	10 µ	ALU	→	VITON
924903827	T 38/25	3 / 8” BSP	25 µ	ALU	→	VITON
924903842	T 38/40	3 / 8” BSP	40 µ	ALU	→	VITON
924903862	T 38/60	3 / 8” BSP	60 µ	ALU	→	VITON
924903882	T 38/80	3 / 8” BSP	80 µ	ALU	→	VITON
924901812	T 18/10	M18X1,5	10 µ	ALU	→	VITON
924901827	T 18/25	M18X1,5	25 µ	ALU	→	VITON
924901842	T 18/40	M18X1,5	40 µ	ALU	→	VITON
924901862	T 18/60	M18X1,5	60 µ	ALU	→	VITON
924901882	T 18/80	M18X1,5	80 µ	ALU	→	VITON
924901411	T-R 14/10	1 / 4” BSP	10 µ	ALU	↔	NBR 70SH
924901426	T-R 14/25	1 / 4” BSP	25 µ	ALU	↔	NBR 70SH
924901441	T-R 14/40	1 / 4” BSP	40 µ	ALU	↔	NBR 70SH
924901461	T-R 14/60	1 / 4” BSP	60 µ	ALU	↔	NBR 70SH

P/N	DESCRIPTION	THREAD	FILTERING	BODY	FLOW	TYPE
924901481	T-R 14/80	1 / 4” BSP	80 µ	ALU	↔	NBR 70SH
924903811	T-R 38/10	3 / 8” BSP	10 µ	ALU	↔	NBR 70SH
924903826	T-R 38/25	3 / 8” BSP	25 µ	ALU	↔	NBR 70SH
924903841	T-R 38/40	3 / 8” BSP	40 µ	ALU	↔	NBR 70SH
924903861	T-R 38/60	3 / 8” BSP	60 µ	ALU	↔	NBR 70SH
924903881	T-R 38/80	3 / 8” BSP	80 µ	ALU	↔	NBR 70SH
924901811	T-R 18/10	M18X1,5	10 µ	ALU	↔	NBR 70SH
924901826	T-R 18/25	M18X1,5	25 µ	ALU	↔	NBR 70SH
924901841	T-R 18/40	M18X1,5	40 µ	ALU	↔	NBR 70SH

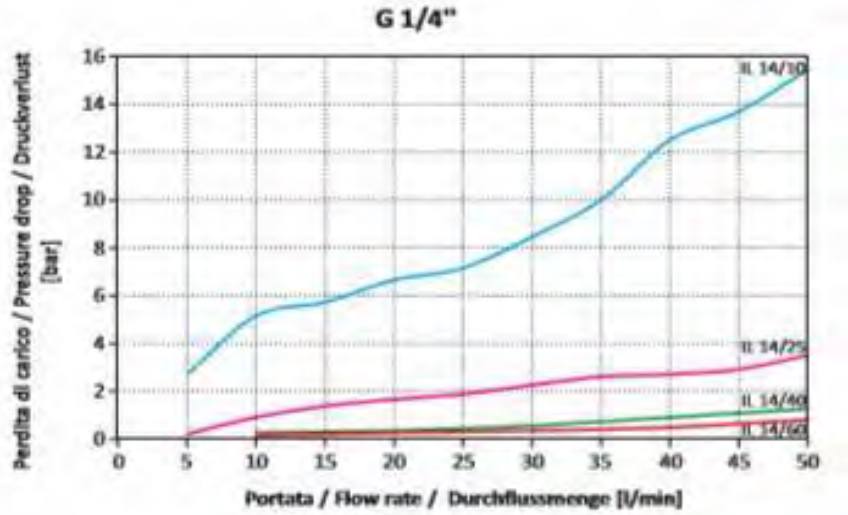

Filter marking:

The 350 Series in-line filters, like all BELL filters, are marked with type, brand, connection, production date and operator. Customized marking on demand.

500 SERIES

Hydraulic filters, very high pressure, in line, in anodized aluminum, maximum flow rate 100 l / min, maximum pressure 500bar

Series: 500 In line

Product line: Agricultural and Forestry, Earthmoving, Automotive, Industrial, Marine, Wind, Transport

- **In line operation**
- **Compact and lightweight**
- **Maximum strength and efficiency**
- **High filtering performance and resistance**
- **With anti-extrusion to overcome even the highest pressure peaks**
- **Interchangeable filter parts**
- **Replaceable or washable filter cartridge in sintered bronze**
- **Reversible filter to ensure filtering in both directions of the flow**
- **Ease of installation**

Technical features:

Max working pressure (bar):	500
Max oil flow (nominal) (l/min):	100
Filtering range (µm):	10-25-40-60-80/100
Filter body:	Anodized aluminum
Filtering element:	Sintered bronze
Seals:	NBR / VITON
Oil ports:	BSP / NPTF
Threads:	1/2 “ - 1/4 “ – 3/8”
Weight (kg):	0,24

Size:

IN LINE FILTER

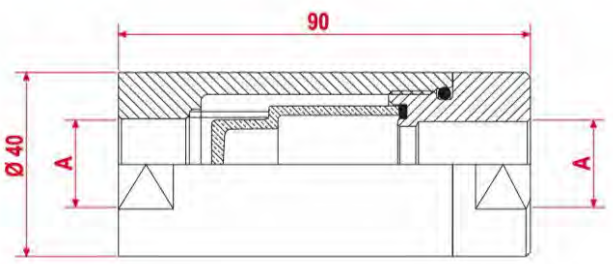

FILTERING ELEMENT

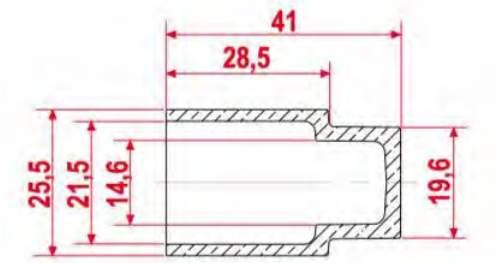

To order:

P/N	DESCRIPTION	THREAD	FILTERING	BODY	FLOW	TYPE
924001410	IL 14/10	1 / 4” BSP	10 µ	ALU	→	NBR 70SH
924001425	IL 14/25	1 / 4” BSP	25 µ	ALU	→	NBR 70SH
924001440	IL 14/40	1 / 4” BSP	40 µ	ALU	→	NBR 70SH
924001460	IL 14/60	1 / 4” BSP	60 µ	ALU	→	NBR 70SH
924003810	IL 38/10	3 / 8” BSP	10 µ	ALU	→	NBR 70SH
924003825	IL 38/25	3 / 8” BSP	25 µ	ALU	→	NBR 70SH
924003840	IL 38/40	3 / 8” BSP	40 µ	ALU	→	NBR 70SH
924003860	IL 38/60	3 / 8” BSP	60 µ	ALU	→	NBR 70SH
924003880	IL 38/80	3 / 8” BSP	80 µ	ALU	→	NBR 70SH
924001810	IL 18/10	M18X1,5	10 µ	ALU	→	NBR 70SH
924001825	IL 18/25	M18X1,5	25 µ	ALU	→	NBR 70SH
924001840	IL 18/40	M18X1,5	40 µ	ALU	→	NBR 70SH
924001860	IL 18/60	M18X1,5	60 µ	ALU	→	NBR 70SH
924001880	IL 18/80	M18X1,5	80 µ	ALU	→	NBR 70SH
924001210	IL 12/10	1 / 2” BSP	10 µ	ALU	→	NBR 70SH
924001225	IL 12/25	1 / 2” BSP	25 µ	ALU	→	NBR 70SH
924001240	IL 12/40	1 / 2” BSP	40 µ	ALU	→	NBR 70SH
924001260	IL 12/60	1 / 2” BSP	60 µ	ALU	→	NBR 70SH
924001280	IL 12/80	1 / 2” BSP	80 µ	ALU	→	NBR 70SH
924001412	IL 14/10	1 / 4” BSP	10 µ	ALU	→	VITON
924001427	IL 14/25	1 / 4” BSP	25 µ	ALU	→	VITON
924001442	IL 14/40	1 / 4” BSP	40 µ	ALU	→	VITON
924001462	IL 14/60	1 / 4” BSP	60 µ	ALU	→	VITON
924001482	IL 14/80	1 / 4” BSP	80 µ	ALU	→	VITON
924003812	IL 38/10	3 / 8” BSP	10 µ	ALU	→	VITON
924003827	IL 38/25	3 / 8” BSP	25 µ	ALU	→	VITON
924003842	IL 38/40	3 / 8” BSP	40 µ	ALU	→	VITON
924003862	IL 38/60	3 / 8” BSP	60 µ	ALU	→	VITON
924003882	IL 38/80	3 / 8” BSP	80 µ	ALU	→	VITON
924001812	IL 18/10	M18X1,5	10 µ	ALU	→	VITON
924001827	IL 18/25	M18X1,5	25 µ	ALU	→	VITON
924001842	IL 18/40	M18X1,5	40 µ	ALU	→	VITON
924001862	IL 18/60	M18X1,5	60 µ	ALU	→	VITON
924001882	IL 18/80	M18X1,5	80 µ	ALU	→	VITON
924001212	IL 12/10	1 / 2” BSP	10 µ	ALU	→	VITON
924001227	IL 12/25	1 / 2” BSP	25 µ	ALU	→	VITON

P/N	DESCRIPTION	THREAD	FILTERING	BODY	FLOW	TYPE
924001242	IL 12/40	1 / 2” BSP	40 µ	ALU	→	VITON
924001262	IL 12/60	1 / 2” BSP	60 µ	ALU	→	VITON
924001282	IL 12/80	1 / 2” BSP	80 µ	ALU	→	VITON
924001411	IL-R 14/10	1 / 4” BSP	10 µ	ALU	↔	NBR 70SH
924001426	IL-R 14/25	1 / 4” BSP	25 µ	ALU	↔	NBR 70SH
924001441	IL-R 14/40	1 / 4” BSP	40 µ	ALU	↔	NBR 70SH
924001461	IL-R 14/60	1 / 4” BSP	60 µ	ALU	↔	NBR 70SH
924001481	IL-R 14/80	1 / 4” BSP	80 µ	ALU	↔	NBR 70SH
924003811	IL-R 38/10	3 / 8” BSP	10 µ	ALU	↔	NBR 70SH
924003826	IL-R 38/25	3 / 8” BSP	25 µ	ALU	↔	NBR 70SH
924003841	IL-R 38/40	3 / 8” BSP	40 µ	ALU	↔	NBR 70SH
924003861	IL-R 38/60	3 / 8” BSP	60 µ	ALU	↔	NBR 70SH
924003881	IL-R 38/80	3 / 8” BSP	80 µ	ALU	↔	NBR 70SH
924001811	IL-R 18/10	M18X1,5	10 µ	ALU	↔	NBR 70SH
924001826	IL-R 18/25	M18X1,5	25 µ	ALU	↔	NBR 70SH
924001841	IL-R 18/40	M18X1,5	40 µ	ALU	↔	NBR 70SH
924001861	IL-R 18/60	M18X1,5	60 µ	ALU	↔	NBR 70SH
924001881	IL-R 18/80	M18X1,5	80 µ	ALU	↔	NBR 70SH
924001211	IL-R 12/10	1 / 2” BSP	25 µ	ALU	↔	NBR 70SH
924001226	IL-R 12/25	1 / 2” BSP	25 µ	ALU	↔	NBR 70SH
924001241	IL-R 12/40	1 / 2” BSP	40 µ	ALU	↔	NBR 70SH
924001261	IL-R 12/60	1 / 2” BSP	60 µ	ALU	↔	NBR 70SH
924001281	IL-R 12/80	1 / 2” BSP	80 µ	ALU	↔	NBR 70SH
924001413	IL-R 14/10	1 / 4” BSP	10 µ	ALU	↔	VITON
924001429	IL-R 14/25	1 / 4” BSP	25 µ	ALU	↔	VITON
924001443	IL-R 14/40	1 / 4” BSP	40 µ	ALU	↔	VITON
924001463	IL-R 14/60	1 / 4” BSP	60 µ	ALU	↔	VITON
924001483	IL-R 14/80	1 / 4” BSP	80 µ	ALU	↔	VITON
924003813	IL-R 38/10	3 / 8” BSP	10 µ	ALU	↔	VITON
924003829	IL-R 38/25	3 / 8” BSP	25 µ	ALU	↔	VITON
924003843	IL-R 38/40	3 / 8” BSP	40 µ	ALU	↔	VITON
924003863	IL-R 38/60	3 / 8” BSP	60 µ	ALU	↔	VITON
924003883	IL-R 38/80	3 / 8” BSP	80 µ	ALU	↔	VITON
924001813	IL-R 18/10	M18X1,5	10 µ	ALU	↔	VITON
924001829	IL-R 18/25	M18X1,5	25 µ	ALU	↔	VITON
924001843	IL-R 18/40	M18X1,5	40 µ	ALU	↔	VITON
924001863	IL-R 18/60	M18X1,5	60 µ	ALU	↔	VITON

P/N	DESCRIPTION	THREAD	FILTERING	BODY	FLOW	TYPE
924001883	IL-R 18/80	M18X1,5	80 µ	ALU	↔	VITON
924001213	IL-R 12/10	1 / 2” BSP	25 µ	ALU	↔	VITON
924001229	IL-R 12/25	1 / 2” BSP	25 µ	ALU	↔	VITON
924001243	IL-R 12/40	1 / 2” BSP	40 µ	ALU	↔	VITON
924001263	IL-R 12/60	1 / 2” BSP	60 µ	ALU	↔	VITON
924001283	IL-R 12/80	1 / 2” BSP	80 µ	ALU	↔	VITON
924001416	IL 14/10	1 / 4” BSP	10 µ	ALU	→	NBR 90SH
924001431	IL 14/25	1 / 4” BSP	25 µ	ALU	→	NBR 90SH
924001446	IL 14/40	1 / 4” BSP	40 µ	ALU	→	NBR 90SH
924001466	IL 14/60	1 / 4” BSP	60 µ	ALU	→	NBR 90SH
924001486	IL 14/80	1 / 4” BSP	80 µ	ALU	→	NBR 90SH
924003816	IL 38/10	3 / 8” BSP	10 µ	ALU	→	NBR 90SH
924003831	IL 38/25	3 / 8” BSP	25 µ	ALU	→	NBR 90SH
924003846	IL 38/40	3 / 8” BSP	40 µ	ALU	→	NBR 90SH
924003866	IL 38/60	3 / 8” BSP	60 µ	ALU	→	NBR 90SH
924003886	IL 38/80	3 / 8” BSP	80 µ	ALU	→	NBR 90SH
924001816	IL 18/10	M18X1,5	10 µ	ALU	→	NBR 90SH
924001831	IL 18/25	M18X1,5	25 µ	ALU	→	NBR 90SH
924001846	IL 18/40	M18X1,5	40 µ	ALU	→	NBR 90SH
924001866	IL 18/60	M18X1,5	60 µ	ALU	→	NBR 90SH
924001886	IL 18/80	M18X1,5	80 µ	ALU	→	NBR 90SH
924001216	IL 12/10	1 / 2” BSP	10 µ	ALU	→	NBR 90SH
924001231	IL 12/25	1 / 2” BSP	25 µ	ALU	→	NBR 90SH
924001247	IL 12/40	1 / 2” BSP	40 µ	ALU	→	NBR 90SH
924001267	IL 12/60	1 / 2” BSP	60 µ	ALU	→	NBR 90SH
924001287	IL 12/80	1 / 2” BSP	80 µ	ALU	→	NBR 90SH
924001417	IL-R 14/10	1 / 4” BSP	10 µ	ALU	↔	NBR 90SH
924001432	IL-R 14/25	1 / 4” BSP	25 µ	ALU	↔	NBR 90SH
924001447	IL-R 14/40	1 / 4” BSP	40 µ	ALU	↔	NBR 90SH
924001467	IL-R 14/60	1 / 4” BSP	60 µ	ALU	↔	NBR 90SH
924001487	IL-R 14/80	1 / 4” BSP	80 µ	ALU	↔	NBR 90SH
924003817	IL-R 38/10	3 / 8” BSP	10 µ	ALU	↔	NBR 90SH
924003832	IL-R 38/25	3 / 8” BSP	25 µ	ALU	↔	NBR 90SH
924003847	IL-R 38/40	3 / 8” BSP	40 µ	ALU	↔	NBR 90SH
924003867	IL-R 38/60	3 / 8” BSP	60 µ	ALU	↔	NBR 90SH
924003887	IL-R 38/80	3 / 8” BSP	80 µ	ALU	↔	NBR 90SH
924001817	IL-R 18/10	M18X1,5	10 µ	ALU	↔	NBR 90SH

P/N	DESCRIPTION	THREAD	FILTERING	BODY	FLOW	TYPE
924001832	IL-R 18/25	M18X1,5	25 µ	ALU	↔	NBR 90SH
924001847	IL-R 18/40	M18X1,5	40 µ	ALU	↔	NBR 90SH
924001867	IL-R 18/60	M18X1,5	60 µ	ALU	↔	NBR 90SH
924001887	IL-R 18/80	M18X1,5	80 µ	ALU	↔	NBR 90SH
924001217	IL-R 12/10	1 / 2” BSP	25 µ	ALU	↔	NBR 90SH
924001232	IL-R 12/25	1 / 2” BSP	25 µ	ALU	↔	NBR 90SH
924001247	IL-R 12/40	1 / 2” BSP	40 µ	ALU	↔	NBR 90SH
924001267	IL-R 12/60	1 / 2” BSP	60 µ	ALU	↔	NBR 90SH
924001287	IL-R 12/80	1 / 2” BSP	80 µ	ALU	↔	NBR 90SH
924011410	IL 14/10	1 / 4” BSP	10 µ	INOX 316L	→	NBR 70SH
924011425	IL 14/25	1 / 4” BSP	25 µ	INOX 316L	→	NBR 70SH
924011440	IL 14/40	1 / 4” BSP	40 µ	INOX 316L	→	NBR 70SH
924011460	IL 14/60	1 / 4” BSP	60 µ	INOX 316L	→	NBR 70SH
924011480	IL 14/80	1 / 4” BSP	80 µ	INOX 316L	→	NBR 70SH
924013810	IL 38/10	3 / 8” BSP	10 µ	INOX 316L	→	NBR 70SH
924013825	IL 38/25	3 / 8” BSP	25 µ	INOX 316L	→	NBR 70SH
924013840	IL 38/40	3 / 8” BSP	40 µ	INOX 316L	→	NBR 70SH
924013860	IL 38/60	3 / 8” BSP	60 µ	INOX 316L	→	NBR 70SH
924013880	IL 38/80	3 / 8” BSP	80 µ	INOX 316L	→	NBR 70SH
924011810	IL 18/10	M18X1,5	10 µ	INOX 316L	→	NBR 70SH
924011825	IL 18/25	M18X1,5	25 µ	INOX 316L	→	NBR 70SH
924011840	IL 18/40	M18X1,5	40 µ	INOX 316L	→	NBR 70SH
924011860	IL 18/60	M18X1,5	60 µ	INOX 316L	→	NBR 70SH
924011880	IL 18/80	M18X1,5	80 µ	INOX 316L	→	NBR 70SH
924011210	IL 12/10	1 / 2” BSP	10 µ	INOX 316L	→	NBR 70SH
924011225	IL 12/25	1 / 2” BSP	25 µ	INOX 316L	→	NBR 70SH
924011240	IL 12/40	1 / 2” BSP	40 µ	INOX 316L	→	NBR 70SH
924011260	IL 12/60	1 / 2” BSP	60 µ	INOX 316L	→	NBR 70SH
924011280	IL 12/80	1 / 2” BSP	80 µ	INOX 316L	→	NBR 70SH
924011411	IL-R 14/10	1 / 4” BSP	10 µ	INOX 316L	↔	NBR 70SH
924011426	IL-R 14/25	1 / 4” BSP	25 µ	INOX 316L	↔	NBR 70SH
924011441	IL-R 14/40	1 / 4” BSP	40 µ	INOX 316L	↔	NBR 70SH
924011461	IL-R 14/60	1 / 4” BSP	60 µ	INOX 316L	↔	NBR 70SH
924011481	IL-R 14/80	1 / 4” BSP	80 µ	INOX 316L	↔	NBR 70SH
924013811	IL-R 38/10	3 / 8” BSP	10 µ	INOX 316L	↔	NBR 70SH
924013826	IL-R 38/25	3 / 8” BSP	25 µ	INOX 316L	↔	NBR 70SH
924013841	IL-R 38/40	3 / 8” BSP	40 µ	INOX 316L	↔	NBR 70SH

P/N	DESCRIPTION	THREAD	FILTERING	BODY	FLOW	TYPE
924013861	IL-R 38/60	3 / 8” BSP	60 µ	INOX 316L	↔	NBR 70SH
924013881	IL-R 38/80	3 / 8” BSP	80 µ	INOX 316L	↔	NBR 70SH
924011811	IL-R 18/10	M18X1,5	10 µ	INOX 316L	↔	NBR 70SH
924011826	IL-R 18/25	M18X1,5	25 µ	INOX 316L	↔	NBR 70SH
924011841	IL-R 18/40	M18X1,5	40 µ	INOX 316L	↔	NBR 70SH
924011861	IL-R 18/60	M18X1,5	60 µ	INOX 316L	↔	NBR 70SH
924011881	IL-R 18/80	M18X1,5	80 µ	INOX 316L	↔	NBR 70SH
924011211	IL-R 12/10	1 / 2” BSP	10 µ	INOX 316L	↔	NBR 70SH
924011226	IL-R 12/25	1 / 2” BSP	25 µ	INOX 316L	↔	NBR 70SH
924011241	IL-R 12/40	1 / 2” BSP	40 µ	INOX 316L	↔	NBR 70SH
924011261	IL-R 12/60	1 / 2” BSP	60 µ	INOX 316L	↔	NBR 70SH
924011281	IL-R 12/80	1 / 2” BSP	80 µ	INOX 316L	↔	NBR 70SH
924011412	IL 14/10	1 / 4” BSP	10 µ	INOX 316L	→	VITON
924011427	IL 14/25	1 / 4” BSP	25 µ	INOX 316L	→	VITON
924011442	IL 14/40	1 / 4” BSP	40 µ	INOX 316L	→	VITON
924011462	IL 14/60	1 / 4” BSP	60 µ	INOX 316L	→	VITON
924011482	IL 14/80	1 / 4” BSP	80 µ	INOX 316L	→	VITON
924013812	IL 38/10	3 / 8” BSP	10 µ	INOX 316L	→	VITON
924013827	IL 38/25	3 / 8” BSP	25 µ	INOX 316L	→	VITON
924013842	IL 38/40	3 / 8” BSP	40 µ	INOX 316L	→	VITON
924013862	IL 38/60	3 / 8” BSP	60 µ	INOX 316L	→	VITON
924013882	IL 38/80	3 / 8” BSP	80 µ	INOX 316L	→	VITON
924011812	IL 18/10	M18X1,5	10 µ	INOX 316L	→	VITON
924011827	IL 18/25	M18X1,5	25 µ	INOX 316L	→	VITON
924011842	IL 18/40	M18X1,5	40 µ	INOX 316L	→	VITON
924011862	IL 18/60	M18X1,5	60 µ	INOX 316L	→	VITON
924011882	IL 18/80	M18X1,5	80 µ	INOX 316L	→	VITON
924011212	IL 12/10	1 / 2” BSP	10 µ	INOX 316L	→	VITON
924011227	IL 12/25	1 / 2” BSP	25 µ	INOX 316L	→	VITON
924011242	IL 12/40	1 / 2” BSP	40 µ	INOX 316L	→	VITON
924011262	IL 12/60	1 / 2” BSP	60 µ	INOX 316L	→	VITON
924011282	IL 12/80	1 / 2” BSP	80 µ	INOX 316L	→	VITON
924011413	IL-R 14/10	1 / 4” BSP	10 µ	INOX 316L	↔	VITON
924011429	IL-R 14/25	1 / 4” BSP	25 µ	INOX 316L	↔	VITON
924011443	IL-R 14/40	1 / 4” BSP	40 µ	INOX 316L	↔	VITON
924011463	IL-R 14/60	1 / 4” BSP	60 µ	INOX 316L	↔	VITON
924011483	IL-R 14/80	1 / 4” BSP	80 µ	INOX 316L	↔	VITON

P/N	DESCRIPTION	THREAD	FILTERING	BODY	FLOW	TYPE
924013813	IL-R 38/10	3 / 8” BSP	10 µ	INOX 316L	↔	VITON
924013829	IL-R 38/25	3 / 8” BSP	25 µ	INOX 316L	↔	VITON
924013843	IL-R 38/40	3 / 8” BSP	40 µ	INOX 316L	↔	VITON
924013863	IL-R 38/60	3 / 8” BSP	60 µ	INOX 316L	↔	VITON
924013883	IL-R 38/80	3 / 8” BSP	80 µ	INOX 316L	↔	VITON
924011813	IL-R 18/10	M18X1,5	10 µ	INOX 316L	↔	VITON
924011829	IL-R 18/25	M18X1,5	25 µ	INOX 316L	↔	VITON
924011843	IL-R 18/40	M18X1,5	40 µ	INOX 316L	↔	VITON
924011863	IL-R 18/60	M18X1,5	60 µ	INOX 316L	↔	VITON
924011883	IL-R 18/80	M18X1,5	80 µ	INOX 316L	↔	VITON
924011213	IL-R 12/10	1 / 2” BSP	10 µ	INOX 316L	↔	VITON
924011229	IL-R 12/25	1 / 2” BSP	25 µ	INOX 316L	↔	VITON
924011243	IL-R 12/40	1 / 2” BSP	40 µ	INOX 316L	↔	VITON
924011263	IL-R 12/60	1 / 2” BSP	60 µ	INOX 316L	↔	VITON
924011283	IL-R 12/80	1 / 2” BSP	80 µ	INOX 316L	↔	VITON

Filter marking:

The in-line filters of the 500 Series, like all BELL filters, are marked with type, brand, connection, production date and operator. Customized marking on demand.

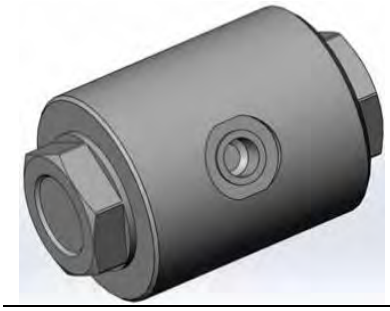

500 SERIES

Hydraulic filters, very high pressure, 90 °, in anodized aluminum, maximum flow rate 100 l / min, maximum pressure 500bar

SerieS: 500 90° T-Filters

Product line: Agricultural and Forestry, Earthmoving, Automotive, Industrial, Marine, Wind, Transport

- **90 ° in-line operation (lateral connection on the filter body)**
- **Compact and lightweight**
- **Maximum strength and efficiency**
- **High filtering performance and resistance**
- **With anti-extrusion to overcome even the highest pressure peaks**
- **Interchangeable filter parts**
- **Replaceable or washable filter cartridge in sintered bronze**
- **Reversible filter to ensure filtering in both directions of the flow**
- **Easy install**
- **Inspection cap of the filter cartridge for even faster and more immediate maintenance**

Technical features:

Max working pressure (bar):	500
Max oil flow (nominal) (l/min):	100
Filtering range (µm):	10-25-40-60-80/100
Filter body:	Anodized aluminum
Filtering element:	Sintered bronze
Seals:	NBR / VITON
Oil ports:	BSP / NPTF
Threads:	1/2 “ - 1/4 “ – 3/8”
Weight (kg):	0,24

Size:

IN LINE FILTER

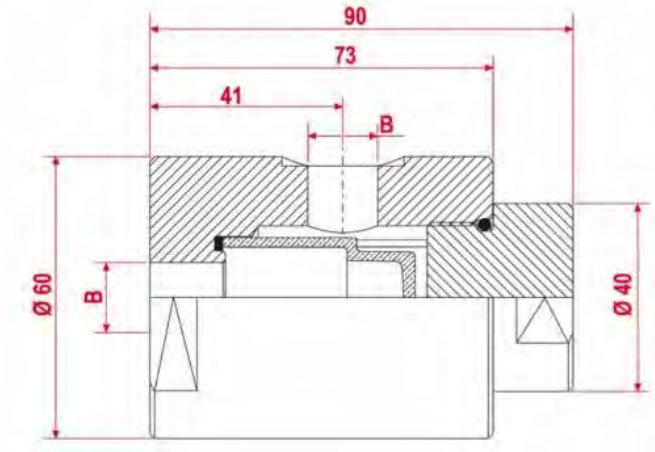

FILTERING ELEMENT

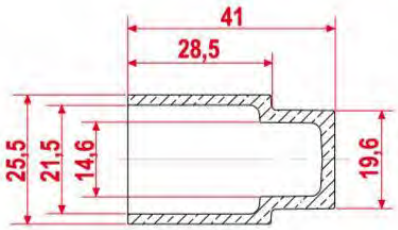

To order:

P/N	DESCRIPTION	THREAD	FILTERING	BODY	FLOW	TYPE
925901410	T 14/10	1 / 4” BSP	10 µ	ALU	→	NBR 70SH
925901425	T 14/25	1 / 4” BSP	25 µ	ALU	→	NBR 70SH
925901440	T 14/40	1 / 4” BSP	40 µ	ALU	→	NBR 70SH
925901460	T 14/60	1 / 4” BSP	60 µ	ALU	→	NBR 70SH
925901480	T 14/80	1 / 4” BSP	80 µ	ALU	→	NBR 70SH
925903810	T 38/10	3 / 8” BSP	10 µ	ALU	→	NBR 70SH
925903825	T 38/25	3 / 8” BSP	25 µ	ALU	→	NBR 70SH
925903840	T 38/40	3 / 8” BSP	40 µ	ALU	→	NBR 70SH
925903860	T 38/60	3 / 8” BSP	60 µ	ALU	→	NBR 70SH
925903880	T 38/80	3 / 8” BSP	80 µ	ALU	→	NBR 70SH
925901810	T 18/10	M18X1,5	10 µ	ALU	→	NBR 70SH
925901825	T 18/25	M18X1,5	25 µ	ALU	→	NBR 70SH
925901840	T 18/40	M18X1,5	40 µ	ALU	→	NBR 70SH
925901860	T 18/60	M18X1,5	60 µ	ALU	→	NBR 70SH
925901880	T 18/80	M18X1,5	80 µ	ALU	→	NBR 70SH
925901413	T 14/10	1 / 4” BSP	10 µ	ALU	→	VITON
925901427	T 14/25	1 / 4” BSP	25 µ	ALU	→	VITON
925901442	T 14/40	1 / 4” BSP	40 µ	ALU	→	VITON
925901462	T 14/60	1 / 4” BSP	60 µ	ALU	→	VITON
925901482	T 14/80	1 / 4” BSP	80 µ	ALU	→	VITON
925903812	T 38/10	3 / 8” BSP	10 µ	ALU	→	VITON
925903827	T 38/25	3 / 8” BSP	25 µ	ALU	→	VITON
925903842	T 38/40	3 / 8” BSP	40 µ	ALU	→	VITON
925903862	T 38/60	3 / 8” BSP	60 µ	ALU	→	VITON
925903882	T 38/80	3 / 8” BSP	80 µ	ALU	→	VITON
925901812	T 18/10	M18X1,5	10 µ	ALU	→	VITON
925901827	T 18/25	M18X1,5	25 µ	ALU	→	VITON
925901842	T 18/40	M18X1,5	40 µ	ALU	→	VITON
925901862	T 18/60	M18X1,5	60 µ	ALU	→	VITON
925901882	T 18/80	M18X1,5	80 µ	ALU	→	VITON
925901411	T-R 14/10	1 / 4” BSP	10 µ	ALU	↔	NBR 70SH
925901426	T-R 14/25	1 / 4” BSP	25 µ	ALU	↔	NBR 70SH
925901441	T-R 14/40	1 / 4” BSP	40 µ	ALU	↔	NBR 70SH
925901461	T-R 14/60	1 / 4” BSP	60 µ	ALU	↔	NBR 70SH
925901481	T-R 14/80	1 / 4” BSP	80 µ	ALU	↔	NBR 70SH
925903811	T-R 38/10	3 / 8” BSP	10 µ	ALU	↔	NBR 70SH

P/N	DESCRIPTION	THREAD	FILTERING	BODY	FLOW	TYPE
925903826	T-R 38/25	3 / 8” BSP	25 µ	ALU	↔	NBR 70SH
925903841	T-R 38/40	3 / 8” BSP	40 µ	ALU	↔	NBR 70SH
925903861	T-R 38/60	3 / 8” BSP	60 µ	ALU	↔	NBR 70SH
925903881	T-R 38/80	3 / 8” BSP	80 µ	ALU	↔	NBR 70SH
925901811	T-R 18/10	M18X1,5	10 µ	ALU	↔	NBR 70SH
925901826	T-R 18/25	M18X1,5	25 µ	ALU	↔	NBR 70SH
925901841	T-R 18/40	M18X1,5	40 µ	ALU	↔	NBR 70SH
925901861	T-R 18/60	M18X1,5	60 µ	ALU	↔	NBR 70SH
925901881	T-R 18/80	M18X1,5	80 µ	ALU	↔	NBR 70SH
925901413	T-R 14/10	1 / 4” BSP	10 µ	ALU	↔	VITON
925901429	T-R 14/25	1 / 4” BSP	25 µ	ALU	↔	VITON
925901443	T-R 14/40	1 / 4” BSP	40 µ	ALU	↔	VITON
925901463	T-R 14/60	1 / 4” BSP	60 µ	ALU	↔	VITON
925901483	T-R 14/80	1 / 4” BSP	80 µ	ALU	↔	VITON
925903813	T-R 38/10	3 / 8” BSP	10 µ	ALU	↔	VITON
925903829	T-R 38/25	3 / 8” BSP	25 µ	ALU	↔	VITON
925903843	T-R 38/40	3 / 8” BSP	40 µ	ALU	↔	VITON
925903863	T-R 38/60	3 / 8” BSP	60 µ	ALU	↔	VITON
925903883	T-R 38/80	3 / 8” BSP	80 µ	ALU	↔	VITON
925901813	T-R 18/10	M18X1,5	10 µ	ALU	↔	VITON
925901829	T-R 18/25	M18X1,5	25 µ	ALU	↔	VITON
925901843	T-R 18/40	M18X1,5	40 µ	ALU	↔	VITON
925901863	T-R 18/60	M18X1,5	60 µ	ALU	↔	VITON
925901883	T-R 18/80	M18X1,5	80 µ	ALU	↔	VITON
925901416	T 14/10	1 / 4” BSP	10 µ	ALU	→	NBR 90SH
925901431	T 14/25	1 / 4” BSP	25 µ	ALU	→	NBR 90SH
925901446	T 14/40	1 / 4” BSP	40 µ	ALU	→	NBR 90SH
925901466	T 14/60	1 / 4” BSP	60 µ	ALU	→	NBR 90SH
925901486	T 14/80	1 / 4” BSP	80 µ	ALU	→	NBR 90SH
925903816	T 38/10	3 / 8” BSP	10 µ	ALU	→	NBR 90SH
925903831	T 38/25	3 / 8” BSP	25 µ	ALU	→	NBR 90SH
925903846	T 38/40	3 / 8” BSP	40 µ	ALU	→	NBR 90SH
925903866	T 38/60	3 / 8” BSP	60 µ	ALU	→	NBR 90SH
925903886	T 38/80	3 / 8” BSP	80 µ	ALU	→	NBR 90SH
925901816	T 18/10	M18X1,5	10 µ	ALU	→	NBR 90SH
925901831	T 18/25	M18X1,5	25 µ	ALU	→	NBR 90SH
925901846	T 18/40	M18X1,5	40 µ	ALU	→	NBR 90SH

P/N	DESCRIPTION	THREAD	FILTERING	BODY	FLOW	TYPE
925901866	T 18/60	M18X1,5	60 µ	ALU	→	NBR 90SH
925901886	T 18/80	M18X1,5	80 µ	ALU	→	NBR 90SH
925901417	T-R 14/10	1 / 4” BSP	10 µ	ALU	↔	NBR 90SH
925901432	T-R 14/25	1 / 4” BSP	25 µ	ALU	↔	NBR 90SH
925901447	T-R 14/40	1 / 4” BSP	40 µ	ALU	↔	NBR 90SH
925901467	T-R 14/60	1 / 4” BSP	60 µ	ALU	↔	NBR 90SH
925901487	T-R 14/80	1 / 4” BSP	80 µ	ALU	↔	NBR 90SH
925903817	T-R 38/10	3 / 8” BSP	10 µ	ALU	↔	NBR 90SH
925903832	T-R 38/25	3 / 8” BSP	25 µ	ALU	↔	NBR 90SH
925903847	T-R 38/40	3 / 8” BSP	40 µ	ALU	↔	NBR 90SH
925903867	T-R 38/60	3 / 8” BSP	60 µ	ALU	↔	NBR 90SH
925903887	T-R 38/80	3 / 8” BSP	80 µ	ALU	↔	NBR 90SH
925901817	T-R 18/10	M18X1,5	10 µ	ALU	↔	NBR 90SH
925901832	T-R 18/25	M18X1,5	25 µ	ALU	↔	NBR 90SH
925901847	T-R 18/40	M18X1,5	40 µ	ALU	↔	NBR 90SH
925901867	T-R 18/60	M18X1,5	60 µ	ALU	↔	NBR 90SH
925901887	T-R 18/80	M18X1,5	80 µ	ALU	↔	NBR 90SH
925911410	T 14/10	1 / 4” BSP	10 µ	INOX 316L	→	NBR 70SH
925911425	T 14/25	1 / 4” BSP	25 µ	INOX 316L	→	NBR 70SH
92511440	T 14/40	1 / 4” BSP	40 µ	INOX 316L	→	NBR 70SH
925911460	T 14/60	1 / 4” BSP	60 µ	INOX 316L	→	NBR 70SH
925911480	T 14/80	1 / 4” BSP	80 µ	INOX 316L	→	NBR 70SH
925913810	T 38/10	3 / 8” BSP	10 µ	INOX 316L	→	NBR 70SH
925913825	T 38/25	3 / 8” BSP	25 µ	INOX 316L	→	NBR 70SH
925913840	T 38/40	3 / 8” BSP	40 µ	INOX 316L	→	NBR 70SH
925913860	T 38/60	3 / 8” BSP	60 µ	INOX 316L	→	NBR 70SH
925913880	T 38/80	3 / 8” BSP	80 µ	INOX 316L	→	NBR 70SH
925911810	T 18/10	M18X1,5	10 µ	INOX 316L	→	NBR 70SH
925911825	T 18/25	M18X1,5	25 µ	INOX 316L	→	NBR 70SH
925911840	T 18/40	M18X1,5	40 µ	INOX 316L	→	NBR 70SH
925911860	T 18/60	M18X1,5	60 µ	INOX 316L	→	NBR 70SH
925911880	T 18/80	M18X1,5	80 µ	INOX 316L	→	NBR 70SH
925911411	T-R 14/10	1 / 4” BSP	10 µ	INOX 316L	↔	NBR 70SH
925911426	T-R 14/25	1 / 4” BSP	25 µ	INOX 316L	↔	NBR 70SH
925911441	T-R 14/40	1 / 4” BSP	40 µ	INOX 316L	↔	NBR 70SH
925911461	T-R 14/60	1 / 4” BSP	60 µ	INOX 316L	↔	NBR 70SH
92511481	T-R 14/80	1 / 4” BSP	80 µ	INOX 316L	↔	NBR 70SH

P/N	DESCRIPTION	THREAD	FILTERING	BODY	FLOW	TYPE
925913811	T-R 38/10	3 / 8” BSP	10 µ	INOX 316L	↔	NBR 70SH
925913826	T-R 38/25	3 / 8” BSP	25 µ	INOX 316L	↔	NBR 70SH
925913841	T-R 38/40	3 / 8” BSP	40 µ	INOX 316L	↔	NBR 70SH
925913861	T-R 38/60	3 / 8” BSP	60 µ	INOX 316L	↔	NBR 70SH
925913881	T-R 38/80	3 / 8” BSP	80 µ	INOX 316L	↔	NBR 70SH
925911811	T-R 18/10	M18X1,5	10 µ	INOX 316L	↔	NBR 70SH
925911826	T-R 18/25	M18X1,5	25 µ	INOX 316L	↔	NBR 70SH
925911841	T-R 18/40	M18X1,5	40 µ	INOX 316L	↔	NBR 70SH
925911861	T-R 18/60	M18X1,5	60 µ	INOX 316L	↔	NBR 70SH
925911881	T-R 18/80	M18X1,5	80 µ	INOX 316L	↔	NBR 70SH
925911412	T 14/10	1 / 4” BSP	10 µ	INOX 316L	→	VITON
925911427	T 14/25	1 / 4” BSP	25 µ	INOX 316L	→	VITON
925911442	T 14/40	1 / 4” BSP	40 µ	INOX 316L	→	VITON
925911462	T 14/60	1 / 4” BSP	60 µ	INOX 316L	→	VITON
925911482	T 14/80	1 / 4” BSP	80 µ	INOX 316L	→	VITON
925913812	T 38/10	3 / 8” BSP	10 µ	INOX 316L	→	VITON
925913827	T 38/25	3 / 8” BSP	25 µ	INOX 316L	→	VITON
925913842	T 38/40	3 / 8” BSP	40 µ	INOX 316L	→	VITON
925913862	T 38/60	3 / 8” BSP	60 µ	INOX 316L	→	VITON
925913882	T 38/80	3 / 8” BSP	80 µ	INOX 316L	→	VITON
925911812	T 18/10	M18X1,5	10 µ	INOX 316L	→	VITON
925911827	T 18/25	M18X1,5	25 µ	INOX 316L	→	VITON
925911842	T 18/40	M18X1,5	40 µ	INOX 316L	→	VITON
925911862	T 18/60	M18X1,5	60 µ	INOX 316L	→	VITON
925911882	T 18/80	M18X1,5	80 µ	INOX 316L	→	VITON
925911413	T-R 14/10	1 / 4” BSP	10 µ	INOX 316L	↔	VITON
925911429	T-R 14/25	1 / 4” BSP	25 µ	INOX 316L	↔	VITON
925911443	T-R 14/40	1 / 4” BSP	40 µ	INOX 316L	↔	VITON
925911463	T-R 14/60	1 / 4” BSP	60 µ	INOX 316L	↔	VITON
925911483	T-R 14/80	1 / 4” BSP	80 µ	INOX 316L	↔	VITON
925913813	T-R 38/10	3 / 8” BSP	10 µ	INOX 316L	↔	VITON
925913829	T-R 38/25	3 / 8” BSP	25 µ	INOX 316L	↔	VITON
925913843	T-R 38/40	3 / 8” BSP	40 µ	INOX 316L	↔	VITON
925913863	T-R 38/60	3 / 8” BSP	60 µ	INOX 316L	↔	VITON
925913883	T-R 38/80	3 / 8” BSP	80 µ	INOX 316L	↔	VITON
925911813	T-R 18/10	M18X1,5	10 µ	INOX 316L	↔	VITON
925911829	T-R 18/25	M18X1,5	25 µ	INOX 316L	↔	VITON

P/N	DESCRIPTION	THREAD	FILTERING	BODY	FLOW	TYPE
925911843	T-R 18/40	M18X1,5	40 µ	INOX 316L	↔	VITON
925911863	T-R 18/60	M18X1,5	60 µ	INOX 316L	↔	VITON
925911883	T-R 18/80	M18X1,5	80 µ	INOX 316L	↔	VITON
925901410	T 14/10	1 / 4” BSP	10 µ	ALU	→	NBR 70SH
925901425	T 14/25	1 / 4” BSP	25 µ	ALU	→	NBR 70SH
925901440	T 14/40	1 / 4” BSP	40 µ	ALU	→	NBR 70SH
925901460	T 14/60	1 / 4” BSP	60 µ	ALU	→	NBR 70SH
925901480	T 14/80	1 / 4” BSP	80 µ	ALU	→	NBR 70SH
925903810	T 38/10	3 / 8” BSP	10 µ	ALU	→	NBR 70SH
925903825	T 38/25	3 / 8” BSP	25 µ	ALU	→	NBR 70SH
925903840	T 38/40	3 / 8” BSP	40 µ	ALU	→	NBR 70SH
925903860	T 38/60	3 / 8” BSP	60 µ	ALU	→	NBR 70SH
925903880	T 38/80	3 / 8” BSP	80 µ	ALU	→	NBR 70SH
925901810	T 18/10	M18X1,5	10 µ	ALU	→	NBR 70SH
925901825	T 18/25	M18X1,5	25 µ	ALU	→	NBR 70SH
925901840	T 18/40	M18X1,5	40 µ	ALU	→	NBR 70SH
925901860	T 18/60	M18X1,5	60 µ	ALU	→	NBR 70SH
925901880	T 18/80	M18X1,5	80 µ	ALU	→	NBR 70SH
925901413	T 14/10	1 / 4” BSP	10 µ	ALU	→	VITON
925901427	T 14/25	1 / 4” BSP	25 µ	ALU	→	VITON
925901442	T 14/40	1 / 4” BSP	40 µ	ALU	→	VITON
925901462	T 14/60	1 / 4” BSP	60 µ	ALU	→	VITON
925901482	T 14/80	1 / 4” BSP	80 µ	ALU	→	VITON
925903812	T 38/10	3 / 8” BSP	10 µ	ALU	→	VITON
925903827	T 38/25	3 / 8” BSP	25 µ	ALU	→	VITON
925903842	T 38/40	3 / 8” BSP	40 µ	ALU	→	VITON
925903862	T 38/60	3 / 8” BSP	60 µ	ALU	→	VITON
925903882	T 38/80	3 / 8” BSP	80 µ	ALU	→	VITON
925901812	T 18/10	M18X1,5	10 µ	ALU	→	VITON
925901827	T 18/25	M18X1,5	25 µ	ALU	→	VITON
925901842	T 18/40	M18X1,5	40 µ	ALU	→	VITON
925901862	T 18/60	M18X1,5	60 µ	ALU	→	VITON
925901882	T 18/80	M18X1,5	80 µ	ALU	→	VITON
925901411	T-R 14/10	1 / 4” BSP	10 µ	ALU	↔	NBR 70SH
925901426	T-R 14/25	1 / 4” BSP	25 µ	ALU	↔	NBR 70SH
925901441	T-R 14/40	1 / 4” BSP	40 µ	ALU	↔	NBR 70SH
925901461	T-R 14/60	1 / 4” BSP	60 µ	ALU	↔	NBR 70SH

P/N	DESCRIPTION	THREAD	FILTERING	BODY	FLOW	TYPE
925901481	T-R 14/80	1 / 4” BSP	80 µ	ALU	↔	NBR 70SH
925903811	T-R 38/10	3 / 8” BSP	10 µ	ALU	↔	NBR 70SH
925903826	T-R 38/25	3 / 8” BSP	25 µ	ALU	↔	NBR 70SH
925903841	T-R 38/40	3 / 8” BSP	40 µ	ALU	↔	NBR 70SH
925903861	T-R 38/60	3 / 8” BSP	60 µ	ALU	↔	NBR 70SH
925903881	T-R 38/80	3 / 8” BSP	80 µ	ALU	↔	NBR 70SH
925901811	T-R 18/10	M18X1,5	10 µ	ALU	↔	NBR 70SH
925901826	T-R 18/25	M18X1,5	25 µ	ALU	↔	NBR 70SH
925901841	T-R 18/40	M18X1,5	40 µ	ALU	↔	NBR 70SH
925901861	T-R 18/60	M18X1,5	60 µ	ALU	↔	NBR 70SH
925901881	T-R 18/80	M18X1,5	80 µ	ALU	↔	NBR 70SH
925901413	T-R 14/10	1 / 4” BSP	10 µ	ALU	↔	VITON
925901429	T-R 14/25	1 / 4” BSP	25 µ	ALU	↔	VITON
925901443	T-R 14/40	1 / 4” BSP	40 µ	ALU	↔	VITON

Filter marking:

The in-line filters of the 500 Series, like all BELL filters, are marked with type, brand, connection, production date and operator. Customized marking on demand.

700 SERIES

Hydraulic filters, very high pressure, in line, in anodized aluminum and stainless steel, maximum flow rate 100 l / min, maximum pressure 700bar

Series: 700 In line

Product line: Agricultural and Forestry, Earthmoving, Automotive, Industrial, Marine, Wind, Transport

- **In line operation**
- **Compact and lightweight**
- **Maximum strength and efficiency**
- **High filtering performance and resistance**
- **With anti-extrusion to overcome even the highest pressure peaks**
- **Interchangeable filter parts**
- **Replaceable or washable filter cartridge in sintered bronze**
- **Reversible filter to ensure filtering in both directions of the flow**
- **Easy install**

Technical features:

Max working pressure (bar):	700
Max oil flow (nominal) (l/min):	100
Filtering range (µm):	10-25-40-60-80/100
Filter body:	Steel / INOX
Filtering element:	Sintered bronze
Seals:	NBR / VITON
Oil ports:	BSP / NPTF
Threads:	1/2 “ - 1/4 “ – 3/8”
Weight (kg):	0,63 (acciaio) – 0,65 (Inox)

Size:

IN LINE FILTER

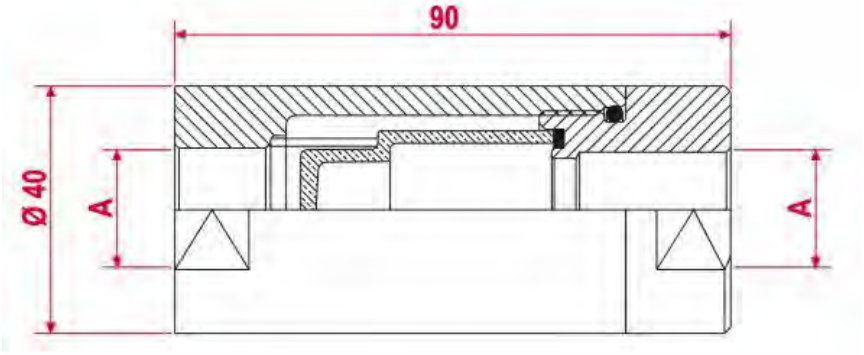

FILTERING ELEMENT

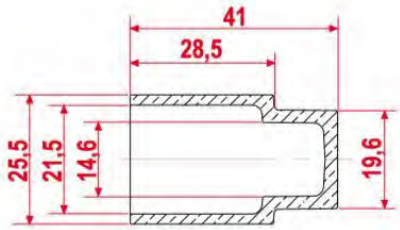

To order:

P/N	DESCRIPTION	THREAD	FILTERING	BODY	FLOW	TYPE
926021411	IL700-R 14/10	1 / 4” BSP	10 µ	STEEL	↔	NBR 70SH
926021426	IL700-R 14/25	1 / 4” BSP	25 µ	STEEL	↔	NBR 70SH
926021441	IL700-R 14/40	1 / 4” BSP	40 µ	STEEL	↔	NBR 70SH
926021461	IL700-R 14/60	1 / 4” BSP	60 µ	STEEL	↔	NBR 70SH
926021481	IL700-R 14/80	1 / 4” BSP	80 µ	STEEL	↔	NBR 70SH
926023811	IL700-R 38/10	3 / 8” BSP	10 µ	STEEL	↔	NBR 70SH
926023826	IL700-R 38/25	3 / 8” BSP	25 µ	STEEL	↔	NBR 70SH
926023841	IL700-R 38/40	3 / 8” BSP	40 µ	STEEL	↔	NBR 70SH
926023861	IL700-R 38/60	3 / 8” BSP	60 µ	STEEL	↔	NBR 70SH
926023881	IL700-R 38/80	3 / 8” BSP	80 µ	STEEL	↔	NBR 70SH
926021811	IL700-R 18/10	M18X1,5	10 µ	STEEL	↔	NBR 70SH
926021826	IL700-R 18/25	M18X1,5	25 µ	STEEL	↔	NBR 70SH
926021841	IL700-R 18/40	M18X1,5	40 µ	STEEL	↔	NBR 70SH
926021861	IL700-R 18/60	M18X1,5	60 µ	STEEL	↔	NBR 70SH
926021881	IL700-R 18/80	M18X1,5	80 µ	STEEL	↔	NBR 70SH
926021211	IL700-R 12/10	1 / 2” BSP	25 µ	STEEL	↔	NBR 70SH
926021226	IL700-R 12/25	1 / 2” BSP	25 µ	STEEL	↔	NBR 70SH
926021241	IL700-R 12/40	1 / 2” BSP	40 µ	STEEL	↔	NBR 70SH
926021261	IL700-R 12/60	1 / 2” BSP	60 µ	STEEL	↔	NBR 70SH
926021281	IL700-R 12/80	1 / 2” BSP	80 µ	STEEL	↔	NBR 70SH
926021413	IL700-R 14/10	1 / 4” BSP	10 µ	STEEL	↔	VITON
926021429	IL700-R 14/25	1 / 4” BSP	25 µ	STEEL	↔	VITON
926021443	IL700-R 14/40	1 / 4” BSP	40 µ	STEEL	↔	VITON
926021463	IL700-R 14/60	1 / 4” BSP	60 µ	STEEL	↔	VITON
926021483	IL700-R 14/80	1 / 4” BSP	80 µ	STEEL	↔	VITON
926023813	IL700-R 38/10	3 / 8” BSP	10 µ	STEEL	↔	VITON
926023829	IL700-R 38/25	3 / 8” BSP	25 µ	STEEL	↔	VITON
926023843	IL700-R 38/40	3 / 8” BSP	40 µ	STEEL	↔	VITON
926023863	IL700-R 38/60	3 / 8” BSP	60 µ	STEEL	↔	VITON
926023883	IL700-R 38/80	3 / 8” BSP	80 µ	STEEL	↔	VITON
926021813	IL700-R 18/10	M18X1,5	10 µ	STEEL	↔	VITON
926021829	IL700-R 18/25	M18X1,5	25 µ	STEEL	↔	VITON
926021843	IL700-R 18/40	M18X1,5	40 µ	STEEL	↔	VITON
926021863	IL700-R 18/60	M18X1,5	60 µ	STEEL	↔	VITON
926021883	IL700-R 18/80	M18X1,5	80 µ	STEEL	↔	VITON
926021213	IL700-R 12/10	1 / 2” BSP	25 µ	STEEL	↔	VITON

P/N	DESCRIPTION	THREAD	FILTERING	BODY	FLOW	TYPE
926021229	IL700-R 12/25	1 / 2” BSP	25 µ	STEEL	↔	VITON
926021243	IL700-R 12/40	1 / 2” BSP	40 µ	STEEL	↔	VITON
926021263	IL700-R 12/60	1 / 2” BSP	60 µ	STEEL	↔	VITON
926021283	IL700-R 12/80	1 / 2” BSP	80 µ	STEEL	↔	VITON
926021417	IL700-R 14/10	1 / 4” BSP	10 µ	STEEL	↔	NBR 90SH
926021432	IL700-R 14/25	1 / 4” BSP	25 µ	STEEL	↔	NBR 90SH
926021447	IL700-R 14/40	1 / 4” BSP	40 µ	STEEL	↔	NBR 90SH
926021467	IL700-R 14/60	1 / 4” BSP	60 µ	STEEL	↔	NBR 90SH
926021487	IL700-R 14/80	1 / 4” BSP	80 µ	STEEL	↔	NBR 90SH
926023817	IL700-R 38/10	3 / 8” BSP	10 µ	STEEL	↔	NBR 90SH
926023832	IL700-R 38/25	3 / 8” BSP	25 µ	STEEL	↔	NBR 90SH
926023847	IL700-R 38/40	3 / 8” BSP	40 µ	STEEL	↔	NBR 90SH
926023867	IL700-R 38/60	3 / 8” BSP	60 µ	STEEL	↔	NBR 90SH
926023887	IL700-R 38/80	3 / 8” BSP	80 µ	STEEL	↔	NBR 90SH
926021817	IL700-R 18/10	M18X1,5	10 µ	STEEL	↔	NBR 90SH
926021832	IL700-R 18/25	M18X1,5	25 µ	STEEL	↔	NBR 90SH
926021847	IL700-R 18/40	M18X1,5	40 µ	STEEL	↔	NBR 90SH
926021867	IL700-R 18/60	M18X1,5	60 µ	STEEL	↔	NBR 90SH
926021887	IL700-R 18/80	M18X1,5	80 µ	STEEL	↔	NBR 90SH
926011217	IL700-R 12/10	1 / 2” BSP	25 µ	INOX 316L	↔	NBR 90SH
926011232	IL700-R 12/25	1 / 2” BSP	25 µ	INOX 316L	↔	NBR 90SH
926011247	IL700-R 12/40	1 / 2” BSP	40 µ	INOX 316L	↔	NBR 90SH
926011267	IL700-R 12/60	1 / 2” BSP	60 µ	INOX 316L	↔	NBR 90SH
926011287	IL700-R 12/80	1 / 2” BSP	80 µ	INOX 316L	↔	NBR 90SH
926011411	IL700-R 14/10	1 / 4” BSP	10 µ	INOX 316L	↔	NBR 70SH
926011426	IL700-R 14/25	1 / 4” BSP	25 µ	INOX 316L	↔	NBR 70SH
926011441	IL700-R 14/40	1 / 4” BSP	40 µ	INOX 316L	↔	NBR 70SH
926011461	IL700-R 14/60	1 / 4” BSP	60 µ	INOX 316L	↔	NBR 70SH
926011481	IL700-R 14/80	1 / 4” BSP	80 µ	INOX 316L	↔	NBR 70SH
926013811	IL700-R 38/10	3 / 8” BSP	10 µ	INOX 316L	↔	NBR 70SH
926013826	IL700-R 38/25	3 / 8” BSP	25 µ	INOX 316L	↔	NBR 70SH
926013841	IL700-R 38/40	3 / 8” BSP	40 µ	INOX 316L	↔	NBR 70SH
926013861	IL700-R 38/60	3 / 8” BSP	60 µ	INOX 316L	↔	NBR 70SH
926013881	IL700-R 38/80	3 / 8” BSP	80 µ	INOX 316L	↔	NBR 70SH
926011811	IL700-R 18/10	M18X1,5	10 µ	INOX 316L	↔	NBR 70SH
926011826	IL700-R 18/25	M18X1,5	25 µ	INOX 316L	↔	NBR 70SH
926011841	IL700-R 18/40	M18X1,5	40 µ	INOX 316L	↔	NBR 70SH

P/N	DESCRIPTION	THREAD	FILTERING	BODY	FLOW	TYPE
926011861	IL700-R 18/60	M18X1,5	60 µ	INOX 316L	↔	NBR 70SH
926011881	IL700-R 18/80	M18X1,5	80 µ	INOX 316L	↔	NBR 70SH
926011211	IL700-R 12/10	1 / 2” BSP	25 µ	INOX 316L	↔	NBR 70SH
926011226	IL700-R 12/25	1 / 2” BSP	25 µ	INOX 316L	↔	NBR 70SH
926011241	IL700-R 12/40	1 / 2” BSP	40 µ	INOX 316L	↔	NBR 70SH
926011261	IL700-R 12/60	1 / 2” BSP	60 µ	INOX 316L	↔	NBR 70SH
926011281	IL700-R 12/80	1 / 2” BSP	80 µ	INOX 316L	↔	NBR 70SH
926011413	IL700-R 14/10	1 / 4” BSP	10 µ	INOX 316L	↔	VITON
926011429	IL700-R 14/25	1 / 4” BSP	25 µ	INOX 316L	↔	VITON
926011443	IL700-R 14/40	1 / 4” BSP	40 µ	INOX 316L	↔	VITON
926011463	IL700-R 14/60	1 / 4” BSP	60 µ	INOX 316L	↔	VITON
926011483	IL700-R 14/80	1 / 4” BSP	80 µ	INOX 316L	↔	VITON
926013813	IL700-R 38/10	3 / 8” BSP	10 µ	INOX 316L	↔	VITON
926013829	IL700-R 38/25	3 / 8” BSP	25 µ	INOX 316L	↔	VITON
926013843	IL700-R 38/40	3 / 8” BSP	40 µ	INOX 316L	↔	VITON
926013863	IL700-R 38/60	3 / 8” BSP	60 µ	INOX 316L	↔	VITON
926013883	IL700-R 38/80	3 / 8” BSP	80 µ	INOX 316L	↔	VITON
926011813	IL700-R 18/10	M18X1,5	10 µ	INOX 316L	↔	VITON
926011829	IL700-R 18/25	M18X1,5	25 µ	INOX 316L	↔	VITON
926011843	IL700-R 18/40	M18X1,5	40 µ	INOX 316L	↔	VITON
926011863	IL700-R 18/60	M18X1,5	60 µ	INOX 316L	↔	VITON
926011883	IL700-R 18/80	M18X1,5	80 µ	INOX 316L	↔	VITON
926011213	IL700-R 12/10	1 / 2” BSP	25 µ	INOX 316L	↔	VITON
926011229	IL700-R 12/25	1 / 2” BSP	25 µ	INOX 316L	↔	VITON
926011243	IL700-R 12/40	1 / 2” BSP	40 µ	INOX 316L	↔	VITON
926011263	IL700-R 12/60	1 / 2” BSP	60 µ	INOX 316L	↔	VITON
926011283	IL700-R 12/80	1 / 2” BSP	80 µ	INOX 316L	↔	VITON
926011417	IL700-R 14/10	1 / 4” BSP	10 µ	INOX 316L	↔	NBR 90SH
926011432	IL700-R 14/25	1 / 4” BSP	25 µ	INOX 316L	↔	NBR 90SH
926011447	IL700-R 14/40	1 / 4” BSP	40 µ	INOX 316L	↔	NBR 90SH
926011467	IL700-R 14/60	1 / 4” BSP	60 µ	INOX 316L	↔	NBR 90SH
926011487	IL700-R 14/80	1 / 4” BSP	80 µ	INOX 316L	↔	NBR 90SH
926013817	IL700-R 38/10	3 / 8” BSP	10 µ	INOX 316L	↔	NBR 90SH
926013832	IL700-R 38/25	3 / 8” BSP	25 µ	INOX 316L	↔	NBR 90SH
926013847	IL700-R 38/40	3 / 8” BSP	40 µ	INOX 316L	↔	NBR 90SH
926013867	IL700-R 38/60	3 / 8” BSP	60 µ	INOX 316L	↔	NBR 90SH
926013887	IL700-R 38/80	3 / 8” BSP	80 µ	INOX 316L	↔	NBR 90SH

P/N	DESCRIPTION	THREAD	FILTERING	BODY	FLOW	TYPE
926011817	IL700-R 18/10	M18X1,5	10 µ	INOX 316L	↔	NBR 90SH
926011832	IL700-R 18/25	M18X1,5	25 µ	INOX 316L	↔	NBR 90SH
926011847	IL700-R 18/40	M18X1,5	40 µ	INOX 316L	↔	NBR 90SH
926011867	IL700-R 18/60	M18X1,5	60 µ	INOX 316L	↔	NBR 90SH
926011887	IL700-R 18/80	M18X1,5	80 µ	INOX 316L	↔	NBR 90SH
926011217	IL700-R 12/10	1 / 2” BSP	25 µ	INOX 316L	↔	NBR 90SH
926011232	IL700-R 12/25	1 / 2” BSP	25 µ	INOX 316L	↔	NBR 90SH
926011247	IL700-R 12/40	1 / 2” BSP	40 µ	INOX 316L	↔	NBR 90SH
926011267	IL700-R 12/60	1 / 2” BSP	60 µ	INOX 316L	↔	NBR 90SH
926011287	IL700-R 12/80	1 / 2” BSP	80 µ	INOX 316L	↔	NBR 90SH
926021411	IL700-R 14/10	1 / 4” BSP	10 µ	STEEL	↔	NBR 70SH
926021426	IL700-R 14/25	1 / 4” BSP	25 µ	STEEL	↔	NBR 70SH
926021441	IL700-R 14/40	1 / 4” BSP	40 µ	STEEL	↔	NBR 70SH
926021461	IL700-R 14/60	1 / 4” BSP	60 µ	STEEL	↔	NBR 70SH
926021481	IL700-R 14/80	1 / 4” BSP	80 µ	STEEL	↔	NBR 70SH
926023811	IL700-R 38/10	3 / 8” BSP	10 µ	STEEL	↔	NBR 70SH
926023826	IL700-R 38/25	3 / 8” BSP	25 µ	STEEL	↔	NBR 70SH
926023841	IL700-R 38/40	3 / 8” BSP	40 µ	STEEL	↔	NBR 70SH
926023861	IL700-R 38/60	3 / 8” BSP	60 µ	STEEL	↔	NBR 70SH
926023881	IL700-R 38/80	3 / 8” BSP	80 µ	STEEL	↔	NBR 70SH
926021811	IL700-R 18/10	M18X1,5	10 µ	STEEL	↔	NBR 70SH
926021826	IL700-R 18/25	M18X1,5	25 µ	STEEL	↔	NBR 70SH
926021841	IL700-R 18/40	M18X1,5	40 µ	STEEL	↔	NBR 70SH
926021861	IL700-R 18/60	M18X1,5	60 µ	STEEL	↔	NBR 70SH
926021881	IL700-R 18/80	M18X1,5	80 µ	STEEL	↔	NBR 70SH
926021211	IL700-R 12/10	1 / 2” BSP	25 µ	STEEL	↔	NBR 70SH
926021226	IL700-R 12/25	1 / 2” BSP	25 µ	STEEL	↔	NBR 70SH
926021241	IL700-R 12/40	1 / 2” BSP	40 µ	STEEL	↔	NBR 70SH
926021261	IL700-R 12/60	1 / 2” BSP	60 µ	STEEL	↔	NBR 70SH
926021281	IL700-R 12/80	1 / 2” BSP	80 µ	STEEL	↔	NBR 70SH
926021413	IL700-R 14/10	1 / 4” BSP	10 µ	STEEL	↔	VITON
926021429	IL700-R 14/25	1 / 4” BSP	25 µ	STEEL	↔	VITON
926021443	IL700-R 14/40	1 / 4” BSP	40 µ	STEEL	↔	VITON
926021463	IL700-R 14/60	1 / 4” BSP	60 µ	STEEL	↔	VITON
926021483	IL700-R 14/80	1 / 4” BSP	80 µ	STEEL	↔	VITON
926023813	IL700-R 38/10	3 / 8” BSP	10 µ	STEEL	↔	VITON
926023829	IL700-R 38/25	3 / 8” BSP	25 µ	STEEL	↔	VITON

P/N	DESCRIPTION	THREAD	FILTERING	BODY	FLOW	TYPE
926023843	IL700-R 38/40	3 / 8” BSP	40 µ	STEEL	↔	VITON
926023863	IL700-R 38/60	3 / 8” BSP	60 µ	STEEL	↔	VITON
926023883	IL700-R 38/80	3 / 8” BSP	80 µ	STEEL	↔	VITON
926021813	IL700-R 18/10	M18X1,5	10 µ	STEEL	↔	VITON
926021829	IL700-R 18/25	M18X1,5	25 µ	STEEL	↔	VITON
926021843	IL700-R 18/40	M18X1,5	40 µ	STEEL	↔	VITON
926021863	IL700-R 18/60	M18X1,5	60 µ	STEEL	↔	VITON
926021883	IL700-R 18/80	M18X1,5	80 µ	STEEL	↔	VITON
926021213	IL700-R 12/10	1 / 2” BSP	25 µ	STEEL	↔	VITON
926021229	IL700-R 12/25	1 / 2” BSP	25 µ	STEEL	↔	VITON
926021243	IL700-R 12/40	1 / 2” BSP	40 µ	STEEL	↔	VITON
926021263	IL700-R 12/60	1 / 2” BSP	60 µ	STEEL	↔	VITON
926021283	IL700-R 12/80	1 / 2” BSP	80 µ	STEEL	↔	VITON
926021417	IL700-R 14/10	1 / 4” BSP	10 µ	STEEL	↔	NBR 90SH
926021432	IL700-R 14/25	1 / 4” BSP	25 µ	STEEL	↔	NBR 90SH
926021447	IL700-R 14/40	1 / 4” BSP	40 µ	STEEL	↔	NBR 90SH
926021467	IL700-R 14/60	1 / 4” BSP	60 µ	STEEL	↔	NBR 90SH
926021487	IL700-R 14/80	1 / 4” BSP	80 µ	STEEL	↔	NBR 90SH
926023817	IL700-R 38/10	3 / 8” BSP	10 µ	STEEL	↔	NBR 90SH
926023832	IL700-R 38/25	3 / 8” BSP	25 µ	STEEL	↔	NBR 90SH
926023847	IL700-R 38/40	3 / 8” BSP	40 µ	STEEL	↔	NBR 90SH
926023867	IL700-R 38/60	3 / 8” BSP	60 µ	STEEL	↔	NBR 90SH
926023887	IL700-R 38/80	3 / 8” BSP	80 µ	STEEL	↔	NBR 90SH
926021817	IL700-R 18/10	M18X1,5	10 µ	STEEL	↔	NBR 90SH
926021832	IL700-R 18/25	M18X1,5	25 µ	STEEL	↔	NBR 90SH
926021847	IL700-R 18/40	M18X1,5	40 µ	STEEL	↔	NBR 90SH
926021867	IL700-R 18/60	M18X1,5	60 µ	STEEL	↔	NBR 90SH
926021887	IL700-R 18/80	M18X1,5	80 µ	STEEL	↔	NBR 90SH
926011217	IL700-R 12/10	1 / 2” BSP	25 µ	INOX 316L	↔	NBR 90SH
926011232	IL700-R 12/25	1 / 2” BSP	25 µ	INOX 316L	↔	NBR 90SH
926011247	IL700-R 12/40	1 / 2” BSP	40 µ	INOX 316L	↔	NBR 90SH
926011267	IL700-R 12/60	1 / 2” BSP	60 µ	INOX 316L	↔	NBR 90SH
926011287	IL700-R 12/80	1 / 2” BSP	80 µ	INOX 316L	↔	NBR 90SH
926011411	IL700-R 14/10	1 / 4” BSP	10 µ	INOX 316L	↔	NBR 70SH
926011426	IL700-R 14/25	1 / 4” BSP	25 µ	INOX 316L	↔	NBR 70SH
926011441	IL700-R 14/40	1 / 4” BSP	40 µ	INOX 316L	↔	NBR 70SH
926011461	IL700-R 14/60	1 / 4” BSP	60 µ	INOX 316L	↔	NBR 70SH

P/N	DESCRIPTION	THREAD	FILTERING	BODY	FLOW	TYPE
926011481	IL700-R 14/80	1 / 4” BSP	80 µ	INOX 316L	↔	NBR 70SH
926013811	IL700-R 38/10	3 / 8” BSP	10 µ	INOX 316L	↔	NBR 70SH
926013826	IL700-R 38/25	3 / 8” BSP	25 µ	INOX 316L	↔	NBR 70SH
926013841	IL700-R 38/40	3 / 8” BSP	40 µ	INOX 316L	↔	NBR 70SH
926013861	IL700-R 38/60	3 / 8” BSP	60 µ	INOX 316L	↔	NBR 70SH
926013881	IL700-R 38/80	3 / 8” BSP	80 µ	INOX 316L	↔	NBR 70SH
926011811	IL700-R 18/10	M18X1,5	10 µ	INOX 316L	↔	NBR 70SH
926011826	IL700-R 18/25	M18X1,5	25 µ	INOX 316L	↔	NBR 70SH

Filter marking:

The in-line filters of the 500 Series, like all BELL filters, are marked with type, brand, connection, production date and operator. Customized marking on demand.

Hydraulic cylinders

(introduction)

STEERING AND LIFTING CYLINDERS

Hydraulic actuators are devices capable of allowing the automation of the entire driving process, minimizing human interaction with the machine.

The hydraulic cylinders have the function of supplying controlled energy to the driving mechanism, so that the driver must use the minimum physical effort in turning the steering wheel to steer the wheels in conditions of average speed and that this effort is considerably reduced even when the vehicle is moving slowly or is stationary.

The actuator uses its hydraulic power to facilitate the mechanical operation of the machine, providing an optimal output in terms of linear, oscillatory or rotary movement.

Our cylinders are mainly addressed to the global off-highway market (agricultural machinery, construction equipment, earthmoving and material handling machines), gardening and golfing machines, trucks, machines for the municipal, marine and automotive industries , transmissions and steering axles.

Steering cylinders, double acting, unbalanced, for off-highway vehicles: agricultural, forestry, earthmoving machinery, forklifts.

Steering cylinders, double-acting, balanced, for off-highway vehicles: agricultural, forestry, earthmoving machinery, forklifts.

Lift cylinders (DE), double acting, front and rear lifts, agricultural and earth moving machines.

Lifting cylinders (T), plunging, single effect, front and rear lifts, agricultural and earth moving machines

All BELL products are designed and manufactured within BELL SRL in via F. De Pisis, 5 - 42124 Reggio Emilia (RE) - Italy, according to the Quality Standards that distinguish the MADE IN ITALY from the Rest of the World.

10DE HYDRAULIC CYLINDER

Differential hydraulic steering cylinder, double acting, unbalanced

---

Series: 10DE

Product line: hydraulic cylinders, off-highway, agriculture, tractors, construction equipment, earthmoving, backhoe loaders, dumpers, wheel loaders, graders, municipal vehicles, forklifts

- **Electrically upset stems or from friction welded chromed bar**
- **Rod guide systems in treated metal or with applied rings**
- **Cold extruded barrel**
- **ASTM B117 96h corrosion resistant chrome surface**
- **Hardened or chromed rods**
- **Monolithic stems or friction welding**
- **Auto-venting system**
- **Application of steering axles or articulated vehicles**
- **Designed to position sensors**

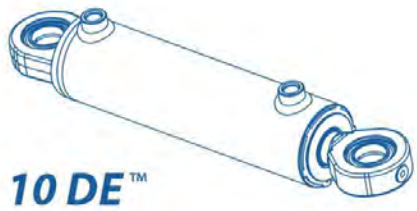

Specifiche tecniche:

Max working pressure (bar):	100
Cylinder compatibility:	Double effect
Working oil temperature (C°)	min -30 max std +90 max avail +100
Stem diameter (mm):	min 22 max 28
Piston diameter (mm):	min 42 max 60
Stroke (mm):	max 285
Weight (kg):	da 2,5 a 3,5

Spare parts:

SEAL KIT

CYLINDER HEAD

Series comparison:

Type	Centering retracted (mm)	Length from studs centering (mm)	Bore (mm)	Rod (mm)	Stem (mm)	Stroke (mm)	Max working Pressure (bar)		Cyl	Paint	Weig ht (kg)
							Nominal	Peak			
CIL.10DE42/22*87	308	155	42	50	22	87		140	DE	primer	
CIL.10DE48/22*107.5	245	135	48	57	22	107,5	90	120	DE	primer	3
CIL.10DE48/22*130	293		48	57	22	130	90	120	DE	primer	3,4
CIL.10DE48/22*117	297		48	57	22	117		140	DE	primer	
CIL.10DE48/22*122	292		48	58	22	122	80	140	DE		
CIL.10DE48/22*125	289	161	48	57	22	125	80	140	DE	primer	3
CIL.10DE48/22*135M+IN	293	168	48	57	22	135	100		DE	primer	
CIL.10DE48/22*145	253	165	48	60	22	145	130		DE	primer	
CIL.10DE42/22*122	292	163,5	42	50	22	122	140	200	DE		2,55
CIL.10DE42/22*122	292	163,5	42	50	22	122	140	200	DE		
CIL.10DE48/22*135	293	151	48	58	22	135	180	200	DE	primer	
CIL.10DE42/22*122	292	163,5	42	50	22	122	140	200	DE	primer	2,6
CIL.10DE42/22*109.5	333	203,5	42	50	22	109	140		DE	primer	2,5
CIL.10DE42/22*109.5	283,5	155	42	50	22	109	140		DE		2,6
CIL.10DE42/22*122	292	163,5	42	50	22	122	140	200	DE		
CIL.10DE48/22*110	296	161,5	48	57	22	110	80	140	DE	primer	3
CIL.10DE48/22*125	299	161,5	48	57	22	105	80	140	DE	primer	3
CIL. 10DE 50/25*128	272	151,5	50	60	25	128	80	110	DE		
CIL. 10DE 50/25*128	272	151,5	50	60	25	128	80	110	DE		3,3
CIL. 10DE 50/25*128	272	151,5	50	60	25	128	80	110	DE		3,3
CIL.10DE60/28X185 "V	574	228	60	70	28	185	120		DE	primer	

HYDRAULIC CYLINDER DE

Hydraulic lifting cylinder, double balanced effect, front connection

Series: DE

Product line: hydraulic cylinders, off-highway, agriculture, tractors, construction equipment, earthmoving, backhoe loaders, dumpers, wheel loaders, graders, municipal vehicles, forklifts

- **Electro-upset stem or from chromed bar friction welded**
- **Rod guide systems in treated metal or with applied rings**
- **Cold extruded barrel**
- **ASTM B117 96h corrosion resistant chrome surface**
- **Hardened monolithic stem**
- **Auto-Venting System**
- **Low friction seals**
- **Low friction guides**
- **Designed to position sensors**

Technical features:

Max working pressure (bar):	200
Cylinder compatibility:	doppio effetto
Working oil temperature (C°)	min -30 max std +90
Stem diameter (mm):	min 22 max 35
Piston diameter (mm):	min 60 max 92
Stroke (mm):	max 140
Weight (kg):	da 2 a 9,5

Series comparison:

Type	Centering retracted (mm)	Length from studs centering (mm)	Bore (mm)	Rod (mm)	Stem (mm)	Stroke (mm)	Max working Pressure (bar)		Cyl	Paint	Weig ht (kg)
							Nominal	Peak			
CIL.DE60/22*80	250	123	60	70	22	80		160	DE		4
CIL.DE60/22*69	250	23	60	70	22	69,5	180		DE	primer	2
CIL.DE50/22*117	310	138	50	60	22	117	130		DE	primer	3,2
CIL.DE80/35*140	355	219	80	92	35	140		200	DE		9,5

Spare parts:

SEAL KIT – CYLINDER HEAD

DEK - FORKLIFT HYDRAULIC CYLINDER

Hydraulic fork steering cylinder, balanced, double acting, through rod, flanged

Series: DEKF

Product line: hydraulic cylinders, off-highway, agriculture, tractors, construction equipment, earthmoving, backhoe loaders, dumpers, wheel loaders, graders, municipal vehicles, forklifts

- **Hardened stem**
- **Rod guide systems in treated metal or with applied rings**
- **Stainless steel rod**
- **ASTM B117 96h corrosion resistant chrome surface**
- **Hardened or chromed stems**
- **K-BOND piston group**
- **Monolithic stems or friction welding**
- **Auto-Venting System**
- **Application: steering axles or articulated vehicles**
- **Designed to position sensors**

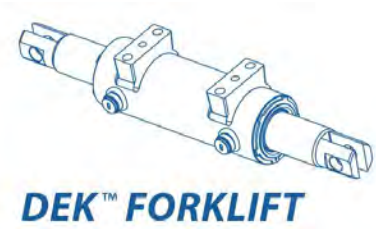

Technical features:

Max working pressure (bar):	120
Cylinder compatibility:	Double effect
Working oil temperature (C°)	min -30 max std +100 max avail +120
Stem diameter (mm):	min 22 max 55
Piston diameter (mm):	min 40 max 75
Stroke (mm):	max 300
Weight (kg):	da 2 a 7

Spare parts:

SEAL KITS – CYLINDER HEAD

Series comparison:

Type	Centering retracted (mm)	Length from studs centering (mm)	Bore (mm)	Rod (mm)	Stem (mm)	Stroke (mm)	Max working Pressure (bar)		Cyl	Paint	Weight (kg)
							Nominal	Peak			
DEKC40/22*120	346	143	40	49	22	60+60	70		DE		2,1
DEKF40/22*92	346	143	40	55	22	46+46	90		DE		
DEKF40/22*120	346	143	40	50	22	60+60	90		DE	primer	2,83
DEKF40/22*150	590	190	40	50	22	150+150	90		DE	primer	
DEKF40/22*150	590	190	40	50	22	150+150	125	140	DE	primer	
DEKF50/25*112	396	120	50	65	25	56+56	90	200	DE		
DEK50/32*164	498	210	50	65	32	82+82			DE	primer	
DEKF48/32*170	456	194	48	58	32	85+85	100	150	DE		
DEKF48/32*170	456	194	48	58	32	85+85	110	150	DE	primer	
DEKF48/32*206	520	226	48	58	32	103+103	50	100	DE		
DEKF48/32*242	604	262	48	58	32	121+121	110	200	DE	primer	
DEKF48/32*150	398	170	48	58	32	75+75	170	210	DE		
DEKF48/32*150	398	170	48	58	32	75+75	180	210	DE		
DEKF48/32*130	376	154	48	58	32	65+65	50	100	DE	primer	
DEKF48/32*170	488	190	48	58	32	85+85	170	210	DE		5,3
DEKF48/32*120	348	143	48	58	32	60+60	180	210	DE		
DEKF 57/32*234	602	260	57	67	32	117+117	175		DE		
DEKF 57/32*130	376	147	57	67	32	65+65	50	100	DE		
DEKF63/32*126	384	162	63	73	32	58+58		140	DE		7
DEKF75/55X170	615	250	75	89	55	85+85	90	120	DE	primer	
DEKF48/32*170	456	194	48	58	32	85+85	100	150	DE		
DEKF48/32*206	520	226	48	58	32	103+103	50	100	DE	primer	

HYDRAULIC CYLINDER T

Hydraulic plunger cylinder, lift cylinder, single acting

Series: T

Product line: hydraulic cylinders, off-highway, agriculture, tractors, construction equipment, earthmoving, backhoe loaders, dumpers, wheel loaders, graders, municipal vehicles, forklifts

- **Electro-upset stem or from chromed bar friction welded**
- **Rod guide systems in treated metal or with applied rings**
- **Cold extruded barrel**
- **ASTM B117 96h corrosion resistant chrome surface**
- **Hardened monolithic stem**
- **Auto-Venting System**
- **Designed to position sensors**

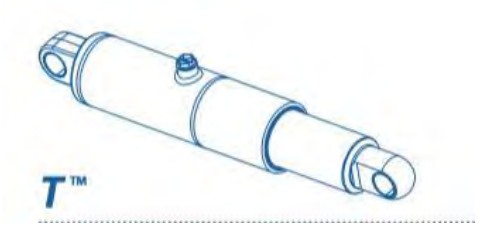

Technical features:

Max working pressure (bar):	100
Cylinder compatibility:	Single effect
Working oil temperature (C°)	min -30 max std +90 max avail +100
Stem diameter (mm):	min 22 max 28
Piston diameter (mm):	min 42 max 60
Stroke (mm):	max 185
Weight (kg):	da 2,5 a 3,5

Spare parts:

SEAL KITS – CYLINDER HEAD

Series comparison:

Type	Centering retracted (mm)	Length from studs centering (mm)	Bore (mm)	Rod (mm)	Stem (mm)	Stroke (mm)	Max working Pressure (bar)		Cyl	Paint	Weight (kg)
							Nominal	Peak			
T.45*145	325	290	45	55	45		120	160	SE	primer	
T.45*115	295	260	45	55	45	115	120	160	SE	primer	4,8
T.45*145	325	288	45	55	45	145	120	160	SE	primer	
T.45*145	325	288	45	55	45	145	120	160	SE	primer	5,4
T.45*115	295	260	55	65	45	115	120	160	SE	primer	
TS 35*146	325	295	42	52	35	146	130	180	SE		3,8
T.45*135	300	265	55	65	45	135	150	180	SE	primer	
T.45*131	311	270	55	65	45	131	140		SE	primer	5,1
T.42*150		283	42	55		150		160	SE	primer	
T.35*138		265		50	35	138		160	SE	primer	
T.50*75	240	200		65	50	75	175		SE	primer	3,8
T.50*175		345	55	65	50	175	175		SE	primer	
T.50*130		277	52	55	50	130	145		SE		5,4
T.55*130		265	65	75	55	130	150	180	SE	primer	
T.60*175		345	65	75	60	175	150		SE		
T.50*175		345	55,5	65	50	175	150		SE		6,4
T.50*175		324	55,5	65	50	175	150		SE		6,7
T.50*175		324	55,5	65	50	175	150		SE		6,7
T.50*144		270	52	55	50	144	140		SE	primer	5,4
T.50*144		270	52	55	50	144	140		SE		5,3
T.50*156		264	52	55	50	156	140		SE		5,1
T.50*137	310	270	55,5		50	137	140		SE	primer	3
T.50*144	310	270	55	62	52	144	140		SE	primer	
T.60*143	336	286	65	75	60	143	185	300	SE	primer	7,8
T.60*143	336	286	65	75	60	143	185	300	SE	primer	7,8
T.60*143	336	286	65	75	60	143	185		SE	primer	7,7
T.60*143	336	286	65	75	60	143	185		SE	primer	7,7
T.50*150		283	50	55	52	150	140	200	SE	primer	6,2
T.60*154		318	65	75	60	154	185	300	SE	primer	8,8
T.60*154		318	65	75	60	154	185		SE	primer	
T.50*131		270	55,5	62	50	131	140		SE	primer	4,9

Industrial Vehicles
Cab Tilting Systems for IVECO & Aftermarket
(introduction)

HYDRAULIC PUMPS AND CYLINDERS FOR CAB TILTING SYSTEMS

Specific hydraulic pumps and cylinders for cabin tipping systems of the IVECO line, IVECO products, Automotive aftermarket, but also suitable for any other type of hydraulic application in which it is necessary to adopt an ultra-compact and light type of pump and a single or double acting cylinder.

- Designed to work at operating pressures up to 420bar.
- Designed to use LHM – UNIVIS and UNIVIS HVI 13/26 hydraulic fluids for the coldest temperatures (down to -40 ° C)
- Ultra compact and light hydraulic pumps with manual operation
- Single and double acting hydraulic cylinders
- Integrated tilting systems (electro-hydraulic pump+double-acting cylinder) for maximum compactness and performance during use

These are real power units, the pumps and cylinders of the IVECO line can be applied to the most varied hydraulic systems.

Main applications:

These hydraulic actuators and pumps of the IVECO series are specific for cab tilting systems on Iveco lines for the aftermarket. However, they can be indispensable for any emergency operation with any type of hydraulic application (high technology) if a failure occurs in the main system.

Livestock and Agriculture: trailer bodies, lifting forks

Industry: guide presses, rotary tables, tank overvoltage, single and double acting cylinder drives

Transport: small hydraulic cranes, trucks, cab tilting, concrete mixers.

Additional benefits:

- Pump drive sleeve in material resistant to ferrous corrosion
- Oil fill and level control cap
- Fittings and protective caps
- Paint according to specification
- Control valves

All BELL products are designed and manufactured within BELL SRL in via F. De Pisis, 5 - 42124 Reggio Emilia (RE) - Italy, according to the Quality Standards that distinguish the MADE IN ITALY from the Rest of the World.

CAB TILTING SYSTEM

HYDRAULIC CYLINDERS

For cab tilting systems, IVECO, single and double effect

Series: IVECO

Product line: hydraulic cylinders, cab tilting, automotive, truck line, Iveco aftermarket, farming, agriculture, industry, transport, industrial vehicles

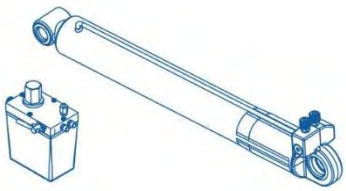

- **Manual operation**
- **Compact design**
- **Working pressure up to 420bar**
- **Adjustable relief valve**
- **440 and 580 cm3 oil tanks**
- **Temperature range -40 ° C + 80 ° C**
- **Oil flow 4cm3 / stroke**
- **Resistance to corrosion and atmospheric agents**
- **Oil fill and level control cap**
- **<weight 2,5Kg**

Technical features:

Cylinder compatibility:	Single/Double effect
Nominal pressure (bar):	350/440
Thrust force (kN)	da 21,6 a 42,3
Pull force (kN)	da 20,7 a 46,9
Length btw centers (closed) (mm):	da 532 a 708
Length btw centers (open) (mm):	da 951 a 1195
Stroke (mm):	da 419 a 515
Idle stroke (mm):	da 43 a 80
Fluid type:	UNIVIS J-26/L.H.M.
Working temperature (°C):	-40 +80
Final paint	18-1600
Weight (kg)	da ≈ 5,6 a 14

CAB TILTING SYSTEM

E-CAB

Integrated electro-hydraulic pump and cylinder, electrically operated, for cab tilting systems, IVECO, double effect

---

Series: IVECO

Product line: electric pumps, hydraulic cylinders, cab tilting, automotive, truck line, Iveco aftermarket, farming, agriculture, industry, transport, industrial vehicles

- **Electric operation**
- **Compact design**
- **Length mm ≈708 (closed)**
- **Stroke mm 484**
- **Amperage (A) 60 (peak)**
- **No. of fittings 2**
- **Resistance to corrosion and atmospheric agents**
- **Diameter of fixing points 20.30 mm**
- **Weight 14 kg**

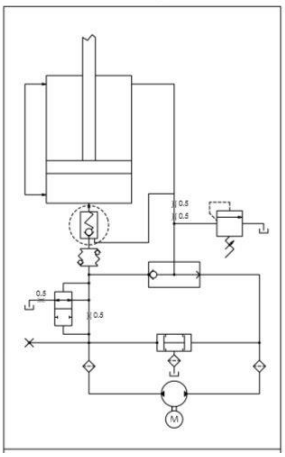

Traditional truck cab tipping systems are generally made up of one or more hydraulic tipping cylinders, one or more groups of hydraulic or mechanical latches that lock the cab in the lowered position and release it when it needs to be raised.

The tilting cylinders and the hydraulic locking laces are connected by high pressure flexible hoses to a separate hydraulic pump, complete with tank and directional valve. The pumps can be manually or electrically operated. Additional valves are present in these systems to control the speed of ascent and descent of the cabin and to avoid accidents in case of breakage of the hydraulic pipes with consequent uncontrolled fall of the cabin itself..

The system presented here, on the other hand, consists of an integrated cylinder + electric pump system which performs, with a single unit, the functions of traditional systems in which the components are separated. The various safety and speed control functions, up and down, are all incorporated in the doors of the cylinder itself, thus allowing maximum compactness and ease of connection and use to be achieved.

Size:

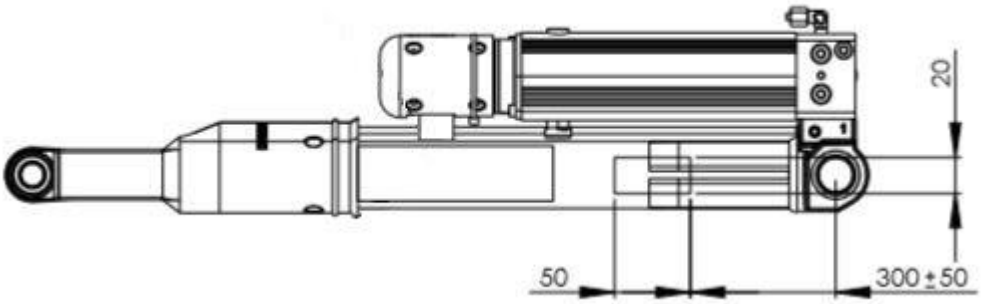

Technical features:

Valve type:	Electric
Thrust force at 280bar	26.9 ± 0.3 kN
Pull force at 280bar	30.0 ± 0.5 kN
Cylinder compatibility	Double effect
Length btw centers (closed) (mm)	≈708
Length btw centers (open) (mm)	1192 ± 4 mm
Stroke (mm)	484
Operating temperature (° C)	-40 +80
Engine type	Permanent magnet
Power supply (VDC)	24
Absorption in motion (A)	20 max
Absorption in stall (A)	40 max
Inrush absorption	60 picco
Fluid type	UNIVIS J-26/L.H.M
Relief valve (bar)	350
Tank capacity (cc)	700
Painting (prime)	grigio IC444 IS 18-1600
Painting (coat)	18-1600
Weight kg)	≈ 14

Series comparison:

Type	#BELL	#OEM	#CROSS REF	Nomilan Output (bar)	Thrust (kN)	Pull (kN)	Length closed (mm)	Length open (mm)	Stroke (mm)	Emtpy Stroke (mm)	Weight (kg)
CIL. DE 35/25*515	**962060030**	504172828	98427951	440	21,6	20,7	667	1182	515	43	5,6
CIL. 50.8/35*484	**962100020**	504173057	500370651	440	42,3	46,9	708	1192	484	80	10
CIL. 50.8/35*419	**962100041**	504062817	504173054	400	38,4	42,9	532	951	419	70	7,5
CIL. 50,8/35*484 ECAB	**962100150**	504065532	5802187029	350±50	26,9	30	705	1195	484	80	14

CAB TILTING SYSTEM

MHP HYDRAULIC PUMPS

Hand operated hydraulic pumps for cabin tilting systems, IVECO, single and double effect

---

Series: IVECO

Product line: hydraulic pumps, cab tilting, automotive, truck line, Iveco aftermarket, livestock, agriculture, industry, transport, industrial vehicles

- **Manual operation**
- **Compact design**
- **Working pressure up to 420bar**
- **Adjustable relief valve**
- **440 & 580 cm3 oil tanks**
- **Temperature range -40°C +80°C**
- **Oil flow 4cm3/stroke**
- **Resistance to corrosion and atmospheric agents**
- **Oil fill and level control cap**
- **<weight 2,5Kg**

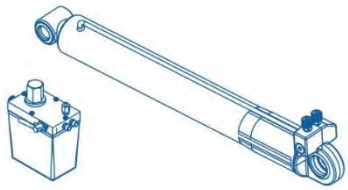

Technical features:

Valve tyep:	Manual
Max working pressure (bar):	420
Cylinder compatibility	Single/Double effect
Working temperature (°C):	Min - 30 -40 (only with UNIVIS HVI 13/26) Max std+ 80
Max relief valve setting (bar):	280
Oil capacity (cm3):	440/580
Oil flow/Stroke (cm3):	4 ±10%
Check valve:	2/4 vie
Paint:	grigio IC444 IS 18-1600
Weight (kg):	≈ 2,5

Size:

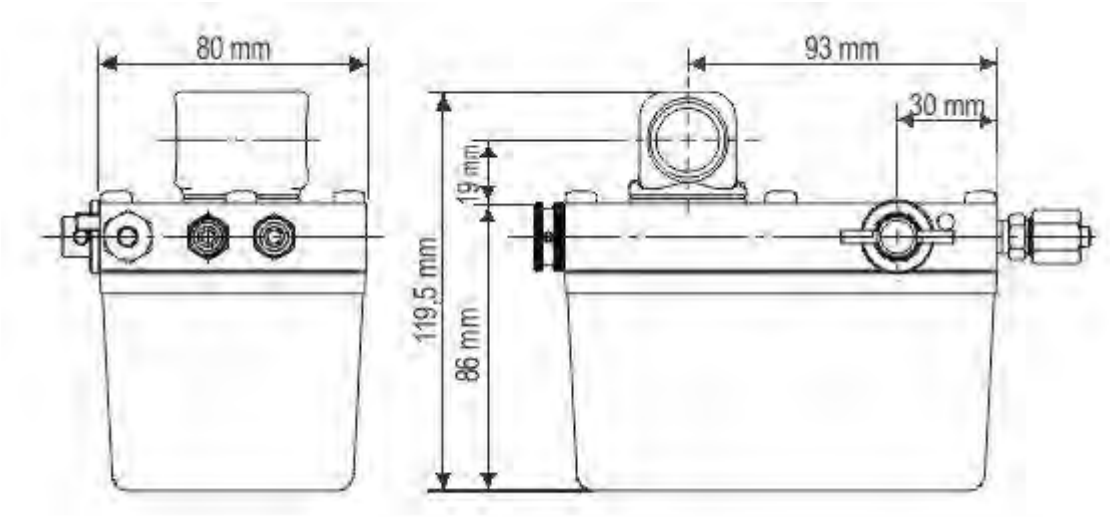

Series comparison:

Type	#BELL	#OEM	#CROSS REF	Nominal pressure (bar)	Relief valve (bar)	Oil flow Per stroke (cm3)	Oil capacity (cm3)	Check valve	Weight (kg)
MHP 420*4/580	**929000010**	504173050	41241683 41211399	420	280	4	580	2/4 vie	2,6
MHP 420*4/500	**929000020**	99458304	500430618	420	370	4	500	2/4 vie	2,5
MHP 420*4/440	**929000050**	504184573	500316981 98401781 99458298	420	420	4	440	2/4 vie	2,5
MHP 420*4/440 E4	**929000090**	504172822	504162344 98411167	420	420	4	440	2/4 vie	2,5
MHP 420*4/580 E4	**929000100** **929000102**	504173053	41281222	420	370	4	580	2/4 vie	2,6
MHP 370*4/440	**929000190**	1908460	4854244 42558828	370	370	4	440	2/4 vie	2,5
EHP 360	**933000021**	504172827	500316940 500316939 98478124 99461432	440	370	/	/	/	2,8
EHP 360+TYCO	**933000023**	5801549520		440	370	/	/	/	2,8

CAB TILTING SYSTEM

EHP ELECTRO-HYDRAULIC PUMPS

Electrically operated hydraulic pump for cabin tilting systems, IVECO, single and double acting

---

Series: IVECO

Product line: hydraulic pumps, cab tilting, automotive, truck line, Iveco aftermarket, industry, transport, industrial vehicles

- **Electric operation**
- **Compact layout**
- **Working pressure up to 440bar**
- **Max relief valve adjustment 370±30/0bar**
- **Temperature range -20°C +50°C**
- **Horizontal installation**
- **Resistance to corrosion and other agents**
- **Lightweight 2,8Kg**

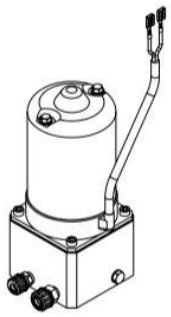

Techncial features:

Motor type:	Permanent magnets	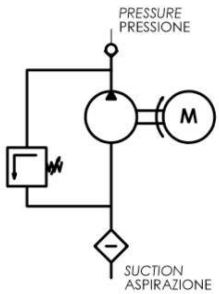	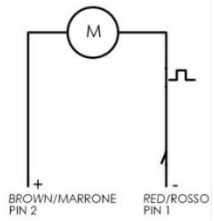
Voltage:	24V DC		
Nominal current:	30A Max		
Peak current value:	60A Max		
Emission level:	C15PR25		
Protection degree:	IP66		
Recommended fluid:	L.H.M./UNIVIS HVI 26		
Working temperature:	-20/+50 °C		
Nominal pressure:	440bar		
Relief valve setting:	370±30/0 bar		
Paint:	grigio IC444 IS 18-1600		
Weight (kg):	≈ 2,8		

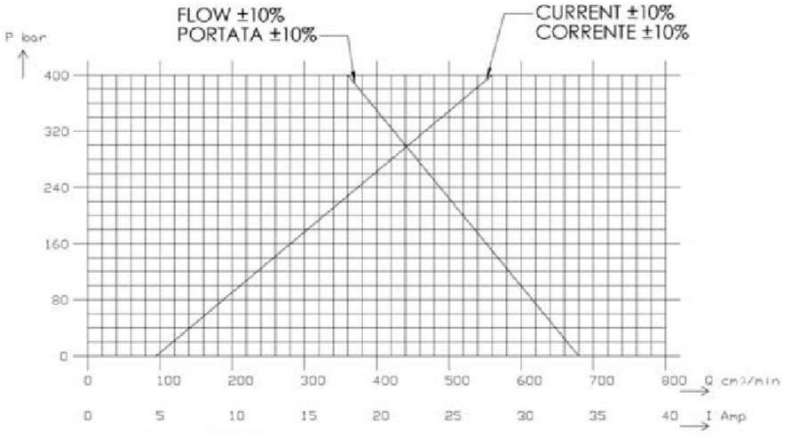

To order:
P/N 933000021 EHP 360 V
P/N 933000023 EHP 360+TYCO V

Use and maintenance manuals

(index)

Hydraulic Pumps (HFP Series)

- 193558095 handbook HFP
- 193550031 handbook HFP2ST

Air-hydraulic pumps (HP Series)

- 193551052 handbook HP
- 193551050 handbook HP AP RC
- 193551070 handbook HP RC REMOTE
- 193557076 handbook HP LEVER

Air-hydraulic pumps (UP Series)

- 193557036 handbook UPF
- 193552100 handbook UPF new
- 193558045 handbook UPC – UPL - UPM
- 193552300 handbook UPR
- 193551063 handbook UPRD
- 193552400 handbook UPRD new
- 193558039 handbook UPMD
- 193558035 handbook UPMD RC
- 193558060 handbook UPHC

Electro-hydraulic battery pumps (BDP Series)

- 193553100-00 handbook BDP700
- 193553110-00 lithium battery instructions BDP700

BELL s.r.l

Via F. De Pisis, 5 - Parco Industriale Mancasale - 42124 Reggio Emilia (ITALY)
Tel. +39 0522 505 915 / 911 - E-mail: bell@bell.it - www.bell.it

Share capital € 500,000.00 I.V. - Registered in the R.E.A. C / o C.C.I.A.A. of Reggio Emilia at 164566

Tax code, VAT number and registration number in the Reggio Emilia Business Register 01171160359 VAT IT 01171160359 - EEE Manufacturers Register n IT08020000002828